BY ORDER OF THE SECRETARY OF THE AIR FORCE

AIR FORCE MANNUAL 91-201 1 JANUARY 1998
AIR FORCE RESERVE COMMAND SUPPLEMENT 1 26 February 1998

Safety

EXPLOSIVES SAFETY STANDARDS

This manual implements Air Force Policy Directive (AFPD) 91-2, *Safety Programs*, and DoD 6055.9-Std, *DoD Ammunition and Explosives Safety Standards*. It establishes a central source for explosive safety criteria. It identifies hazards and states safety precautions and rules when working with explosives. It applies to everyone involved in explosives operations of any kind at Air Force, Air National Guard and Air Force Reserve-owned or leased facilities and to US-titled ammunition in contractor or host-nation facilities. See attachment 1 for a glossary of abbreviations, acronyms, and terms used in this manual.
Send major command (MAJCOM) supplements to HQ USAF/SE, 9700 Avenue G SE, Kirtland AFB NM 87117-5671, for approval before publication. Send recommended changes on AF Form 847, **Recommendation for Change of Publication,** as well as general correspondence about the content of this manual through command channels to HQ AFSC/SEP, 9700 Avenue G SE, Kirtland AFB NM 87117-5671.
(AFRC) This supplement implements and extends the guidance of Air Force Manual (AFMAN) 91-201, 1 January 1998. This supplement covers the procedures and standards that promote the safe storage and handling of Air Force munitions.

SUMMARY OF REVISIONS

★This revision aligns the manual with AFPD 91-2, *Safety Programs*, and DoD 6055.9-STD, *DoD Ammunition and Explosives Safety Standards.* Portions of the manual have been expanded primarily for clarification purposes. Previous guidance has been elaborated upon to provide greater detail for program managers.

Chapter 1-- INTRODUCTION **Paragraph**

Section A--Explosives Safety General Instructions
Policy..... 1.1
Scope 1.2
Storing and Disposing of Non-DoD-Owned Explosives
and Other Hazardous and Toxic Materials..... 1.3
Planning for Deployments 1.4

Section B--Assessing Explosives Risks
Commanders Risk Assessment 1.5

Chapter 2--EXPLOSIVE SAFETY REQUIREMENTS

Section A--General Guidance
General Information 2.1
Personnel Qualifications..... 2.2
Locally Written Instructions 2.3
Contents of Locally Written Instructions..... 2.4
Personnel and Explosives Limits 2.5
Health and Environment..... 2.6
Static or Public Display 2.7
Safety Certification of Munitions Systems 2.8
Fireworks Displays..... 2.9
Housekeeping..... 2.10
Smoking..... 2.11
Handling Explosives and Movement Precautions 2.12
Hunting..... 2.13
Training Ammunition..... 2.14
Simulators and Smoke Producing Munitions..... 2.15

Supersedes AFMAN 91-201, 1 December 96. Certified by: HQ USAF/SE (Maj Gen Francis C. Gideon, Jr.)
OPR: HQ AFSC/SEP (Major Joyce A. Cummings) Pages:163/Distribution: F

Training and Exercise Plans 2.16
Military Working Dog Explosives 2.17

Section B--Fire Protection
Guidance 2.18
Fire Drills 2.19
Alarms 2.20
Fire Prevention Requirements 2.21
Fire Extinguishers 2.22
Storing Water for Firefighting 2.23
Emergency Withdrawal Distances 2.24
On-Scene Placarding Guidance to Emergency Personnel. 2.25

Section C--Storage and Compatibility
Basic Criteria 2.26
Requirements for Storage Locations 2.27
Storage Magazines 2.28
Explosives Stocks 2.29
Damaged Containers and Unpackaged Items 2.30
Unserviceable Explosive Items 2.31
Operations in Storage Spaces Containing Explosives 2.32
Repairing Containers 2.33
Repairing Explosives Facilities 2.34
Licensed Explosives Locations 2.35
Items or Situations not Requiring a License 2.36
Safety Requirements for Specific Facilities and Explosives 2.37
Base Defense Support Munitions for Dispersed Locations 2.38
Toxic Chemical Ammunition and Agents 2.39
Other Toxic Substances 2.40
Dividing Walls 2.41
Compatibility of Ammunition and Explosives Items 2.42
Mixed Compatibility 2.43
Exceptions to Compatibility 2.44

Section D--Electrical Hazards
General Information 2.45
Hazardous Locations 2.46
Approved Equipment 2.47
Electrical Lines 2.48
Permanent Lighting for Storage Magazines 2.49
Flashlights and Lanterns 2.50
Static Electricity and Grounding 2.51
Static Grounding 2.52
Installed Systems and Equipment Grounds 2.53
Lightning Protection 2.54
Electrical Testing of Explosives Items, Components, and Weapons Systems 2.55
Procedures in Event of Electrical Storms 2.56
Grounding Aircraft for Explosives Loading and Unloading Operations 2.57
Hazards of Electromagnetic Radiation to Electro-explosive Devices (EED) 2.58

Section E--Transportation
Guidance 2.59
Federal Regulation 2.60
Basic Directives 2.61
Local Laws Regulating Transportation of Explosives and Dangerous Articles 2.62

Hazard Classification Requirements 2.63
Compatibility of Explosives During Transportation 2.64
Packaging 2.65
Shipment of Explosives Which Have Been Damaged or Failed to Function 2.66
Guides for Controlling Incoming Explosives Shipments 2.67
Explosive Movement Routes on Base 2.68
Safe Haven 2.69
Vehicle and Materials Handling Equipment General Safety Requirements 2.70
Transporting Explosives 2.71
Battery-Powered Materials Handling Equipment 2.72
Gasoline or Diesel-Powered Materials Handling Equipment 2.73
Motor Vehicle Transportation 2.74
Transporting Dangerously Unserviceable Explosive Items for Disposal 2.75
Railroad Transportation 2.76
Movement of Explosives Shipments by Air 2.77
Transportation of Explosives by Water 2.78

Section F--Testing, Procedures Verification, Disassembling and Modifying Explosives Items
Guidance 2.79
Technical Personnel and Guidance 2.80
Authorized Operations 2.81
Protective Requirements 2.82

Section G--Command Unique Explosives Items and Situations.
General Information 2.83

Chapter 3--APPLYING QUANTITY-DISTANCE (Q-D) CRITERIA

Section A--General Q-D Guidance
Introduction 3.1
Types of Separations 3.2
Concurrent operations 3.3
The Hazard Classification System 3.4
Hazard Classes and Divisions 3.5

Section B--Q-D Application
General Information 3.6
Determining Explosives Content of Items 3.7
Determining the Explosives Content of a PES 3.8
Exposed Sites 3.9
Measuring Distance 3.10
Determining Q-D Separations 3.11
Barricades 3.12

Section C--Q-D Criteria For Specific Facilities or Situations
Related Facilities 3.13
Rocket Storage, Checkout, and Assembly (RSCA) Building 3.14
Loading Docks used for Transferring Explosives 3.15
Railcars or Vehicles Spotted at Operating Buildings 3.16
Vehicle Parking Areas 3.17
Warehouses 3.18
Interservice Explosive Facilities 3.19
Hardened Aircraft Shelters (HAS) and Flow-thru Revetments 3.20
Munitions in Austere Areas 3.21
Module Description and Siting Criteria in Austere Areas 3.22
Modular Storage Restrictions 3.23
Open Storage in Austere Areas 3.24
Explosives-Loaded Aircraft, Airfield Areas, and Related Support Facilities 3.25

Aircraft Battle Damage Repair Sites 3.26
Planned Detonation or Burns 3.27
Explosive Ordnance Disposal (EOD)Training 3.28
Petroleum, Oil, Lubricant (POL) and Hydrazine H-70 Facilities 3.29
Liquid Propellants 3.30

Section D- Applying Q-D Principles To Specific Weapons Systems and Special Storage Configurations
General Information 3.31
LGM-30 (Minuteman) 3.32
LGM-118 (Peacekeeper) 3.33
Tactical Missile Separations 3.34
Aircraft Criteria 3.35
Buffered Storage Concept 3.36
Angled Storage 3.37
Weapons Storage Vaults in Hardened Aircraft Shelters 3.38
Specific Items and Situations 3.39

Chapter 4--EXPLOSIVES SITE PLANNING, CONSTRUCTION REQUIREMENTS AND ASSESSING RISK
General Information 4.1

Section A--Explosive Site Planning
Basic Guidance 4.2
The Submission Process 4.3
Specific Situations Requiring Explosives Site Plan Submission 4.4
Siting a Potential Explosion Site (PES) 4.5
Siting a Non Explosives Exposed Site (ES) 4.6
Facility Modifications or Change in Use 4.7
Approval Levels for Specific Explosives Site Plans 4.8
Site Plans Involving Violations of Explosives Safety Standards 4.9
Tier Siting and Risk Management 4.10
Explosives Site Plan Development 4.11
Computerized Site Planning 4.12
Other Explosives Site Planning Format Options 4.13
Siting for Contingencies, Peacetime Deployments or Exercises Simulating Contingencies 4.14
Establishing and Maintaining IBD Clear Zones 4.15
Reduction or Redesignation of Clear Zones 4.16

Section B--Construction Considerations
General Munitions Facilities Design Information. 4.17
Interior Finishes and Floors for Explosives Handling Facilities 4.18
Fire Walls 4.19
Reinforced Concrete Walls 4.20
Blast Doors 4.21
Building Exits 4.22
Exit Doors 4.23
Safety Chutes 4.24
Emergency Exits and Fire Escapes 4.25
Stairways 4.26
Fixed Ladders 4.27
Platforms, Runways, and Railings 4.28
Passageways 4.29
Roads, Walks, and Gates 4.30
Windows and Skylights 4.31
Drains and Sumps 4.32
Choosing and Installing Hardware 4.33
Tunnels 4.34
Powerhouse Equipment 4.35
Refrigeration 4.36

Laundries. 4.37
Steam for Explosives Processing and Heating, Operations and Facilities 4.38
Ventilation 4.39
Electrical Equipment. 4.40
Outdoor Storage Sites 4.41
Collection of Explosives Dusts. 4.42
Water Flow for Explosives Manufacturing Areas and Loading Plants 4.43
Automatic Sprinkler Systems 4.44
Deluge Systems. 4.45
Maintenance and Repairs to Equipment and Buildings 4.46

Section C--Assessing Risk by Knowing the Effects of Explosions
General 4.47
Blast Pressure 4.48
Fragments 4.49

Chapter 5--EXCEPTIONS
General Information 5.1
Definitions and Basic Guidance 5.2
Approval Levels 5.3
Reviews 5.4
Preparing Exemptions and Waivers 5.5
Processing Waivers and Exemptions 5.6
Base Explosives Exception Matrix (BEEM) 5.7

Chapter 6--REAL PROPERTY CONTAMINATED WITH AMMUNITION AND EXPLOSIVES
General 6.1
Disposal 6.2
Identification and Control at Active Installations. 6.3
Active Installation Land Disposal 6.4
Remediation of Formerly Used Defense Sites (FUDS) 6.5
Mineral Exploration and Extraction 6.6
Real Property Contaminated With Ammunition and Explosives 6.7

Forms Prescribed
AF Form 943, **Explosives Waiver/Exemption/Deviation Site Plan** 4.11
AF Form 2047, **Explosives Facility License** 2.35

Figures ***Page***
1.1. Generalized Risk Assessment Procedures 8
2.1. Fire Symbols 16
2.2. Chemical Symbols 17
2.3. Recommended Safe Separation Distances for EEDs in Exposed Conditions 39
3.1. Reduction For Sparsely Populated Locations 64
3.2. Typical Barricade -Stack Relationships 74
3.3. Orientation Effects on Intermagazine Distance 75
3.4. Hazard Zones for Hardened Aircraft Shelters and Igloos 83
3.5. Typical Eight Cell Module 85
3.6. Fragment Zones for General Purpose Bombs 99
★3.7. F-15 Aircraft Criteria 100
★3.8. F-16 Aircraft Criteria 101

Tables
2.1. Minimum Withdrawal Distances for Explosives Involved in Fire 15
2.2. Fire Symbol Hazards and Actions 18
2.3. Chemical Symbol Hazards and Actions 19
2.4. Storage Compatibility Mixing Chart 28
2.5. Recommended EED Safe Separation Distances and Power Densities 38

3.1. Distance to Prevent Breaching 51
3.2. Maximum HC/D 1.1 Explosives Allowed 55
3.3. Quantity-Distance Criteria 56
3.4. Factors for Computing IL from Igloos 62
3.5. Quantity-Distance for 3rd Generation HAS to Unhardened ES 63
3.6. Quantity-Distance Separation Distances 65
3.7. HC/D 1.1 Intraline Distances From Earth-Covered Igloos 68
3.8. HC/D 1.2 Separation Distances 69
3.9. HC/D 1.3 Separation Distances 70
3.10. HC/D 1.6 Separation Distances 71
3.11. Related Facilities 76
3.12. Intershelter Separation Criteria for Aircraft Survival 80
3.13. Intershelter Separation Criteria to Prevent Simultaneous Detonation 81
3.14. Separation Distances For Missiles in Aircraft Shelters 82
3.15. Liquid Propellant TNT Equivalents 90
3.16. Factors For Converting Gallons of Propellant into Pounds 91
3.17. Propellant Hazards and Compatibility Groups 92
3.18. Quantity-Distance for Propellants 94
3.19. Hazard Group IV Separation Distances 95
3.20. Minuteman TNT Equivalencies 96
3.21. Peacekeeper TNT Equivalencies 97
3.22. Minimum Distances For Specific Items and Situations 102
4.1. K-Factor to PSI Relationship 117
4.2. Blast Effects 118
5.1. BEEM Impact Categories 122

Attachments

1. Glossary of Abbreviations, Acronyms, and Terms 125
2. Sources for Non-Air Force Reference Publications 136
3. How To Complete AF Form 2047, **Explosives Facility License** 138
4. How To Complete AF Form 943, **Explosives Waiver/Exemption/Deviation Site Plan** 139
5. Sample Cover Letter for Air Force Quantity-Distance Exemption Request 143
6. Selected Secretary of the Air Force Exemptions 144
★7. Munitions Approved for Storage in Flightline ARMCO Revetments 148
8. Subject Index 152
9. Combined Quantity Distance Criteria Table 158

Chapter 1

INTRODUCTION

Section A--Explosives Safety General Instructions

1.1. Policy. It is Air Force policy consistent with operational requirements to:

1.1.1. Observe explosives safety practices during war and peacetime operations that include the use of live explosives.

1.1.2. Comply with Department of Defense (DoD) and Air Force explosives safety and environmental standards.

1.1.3. Provide the maximum possible protection to personnel and property, both inside and outside the installation, from the damaging effects of potential accidents involving ammunition and explosives.

1.1.4. Comply with the cardinal principle for explosives safety. Expose the minimum number of people to the minimum amount of explosives for the minimum amount of time.

1.1.5. Comply with this manual except when compliance with more restrictive local standards is mandatory by an international agreement. When ammunition is not in Air Force custody and under Air Force control, comply with Air Force standards to the extent consistent with agreements or arrangements with the host country concerned. If US Air Force personnel occupy leased bases within North Atlantic Treaty Organization (NATO) countries, the safety distances in NATO AC/258 - D/258 apply to exposures outside the base boundary. Within the base, use NATO criteria for host nation exposed sites. Use the criteria in this manual for US personnel and facilities.

1.2. Scope.

1.2.1. The provisions of this directive apply whenever any explosives, propellant, or similar hazard class 1 energetic materials or other ammunitions items in classes 2 through 9 are present on Air Force owned or leased facilities and may, when specified in the contract, apply at Air Force owned, contractor operated facilities. If explosives safety requirements are not clearly specified in a contract, apply the provisions of DoD 4145.26-M, *DoD Contractors Safety Manual for Ammunition and Explosives*. The provisions herein also apply to Air Force ammunition and explosives facilities whenever Air Force titled ammunition and explosives are in the custody of Air Force civilian or military personnel, and to Air Force titled ammunition and explosives in host nation facilities.

1.2.1. (AFRC) Obtain any explosive items required for use through munitions supply channels and ship through established military or contract transportation channels. Proposed deviations to these requirements must be justified as mission essential and approved by the base safety office, munitions supply, and traffic management office.

1.2.2. The contracting officer provides appropriate portions of this manual to the contractor. Weapons safety personnel will advise the contractor on explosives safety standards.

★1.2.3. This standard governs siting and construction of Air Force facilities. Continue to use existing facilities, which do not comply with this standard, for the balance of their useful lives insofar as it can be demonstrated that redesign or modification is not feasible, and that the quantity of explosives, propellants, or chemical agents cannot be reduced for reasons of operational necessity. Review this information at least every two years to see if mission changes will allow bringing the facility into compliance with current standards. If this is not possible, and the facility is still being used for its original purpose and in accordance with its original criteria, then continue to maintain the documentation that was generated/applicable at the onset. To invoke this grandfathering clause, have the following on file at the installation:

1.2.3.1. Date of construction, original purpose and quantity of explosives approved.

1.2.3.2. Explosives safety criteria in effect at the time of construction.

1.2.3.3. An explanation why redesign or modification is not feasible.

1.2.3.4. An explanation why quantities cannot be reduced below existing levels.

1.2.3.5. An explanation why current explosives safety criteria cannot be applied to the facility.

1.2.3.6. A statement that hazards are not greater than those assumed for the original siting.

★1.2.3.7. Written approval from the installation commander and the MAJCOM/SE when initially invoking the grandfather clause.

★1.2.3.8. Documentation of biennial (every two years) review by the installation Weapon safety Officer (WSO) ensuring mission requirements support continued use.

1.3. Storing and Disposing of Non-DoD Owned Explosives. Do not store or dispose of non-DoD owned or non-Air Force approved ammunition and explosives or other energetic materials on Air Force installations except as follows:

1.3.1. Agreements with the General Services Administration for the storage of strategic and critical materials in the National Stockpile Program.

1.3.2. Emergency lifesaving assistance to civil authorities involving the temporary storage or disposal of explosives.

1.3.3. Arrangements with the Department of Energy for the temporary storage of nuclear materials or non-nuclear classified materials.

1.3.4. Assistance and refuge for commercial carriers carrying material of other Federal agencies during transportation emergencies (e.g., SAFE HAVEN).

1.3.5. The above exceptions and additional guidance are contained in DoD Directive 6050.8, *Storage and Disposal of Non-DoD Owned Hazardous or Toxic Materials on DoD Installations.*

1.3.6. When exception is invoked and storage is authorized, paragraph 1.2. above applies. Treat explosives of unknown hazard/class division as 1.1L.

1.4. Planning for Deployments. The requirements of this manual also apply to contingencies, peacetime deployments, and exercises where explosives are involved. At no time is the observance of explosives safety practices more important than when deploying and/or employing combat forces. Explosives safety is an integral part of combat survivability.

1.4.1. Pay careful attention during planning to ensure compliance with explosives quantity distance (Q-D) rules as discussed in Annex FF of the Air Force War Mobilization Plan Vol. 1 (WMP1).

1.4.2. Major Commands (MAJCOMs) that deploy or support deployed forces must develop procedures and site plans for parking explosives-loaded aircraft, as well as receipt, storage, buildup and delivery of munitions. Explosives safety considerations must be an integral part of the site survey team's visit. These plans are developed jointly by Operations, Civil Engineering, Logistics and Safety from both augmented and augmenting MAJCOMs. Furnish copies of site plans and procedures to the deploying unit. Planning for possible deployments includes:

1.4.2. (AFRC) Upon request from the appropriate commander, HQ AFRC Weapons safety Officer coordinates mobility/deployment site plans between individual units and gaining commands. Site survey deployment teams include a senior munitions manager and a safety representative. Personnel responsible for weapons safety planning on the team will be trained and fully qualified in the weapons safety discipline.

1.4.2.1. A review of waivers and exemptions that may impact deployment plans. Selected exemptions are reproduced at Attachment 6.

1.4.2.2. Periodic updates as munitions commitments and beddown locations change. Include civil engineering concept plans for constructing required aircraft revetments or protective shelters and munitions storage facilities. For units with a munitions mission but no specific deployment location, site preplanning must be adaptable to any deployment location.
1.4.2.3. Local written procedures for all phases of munitions operations at the deployed location.
1.4.2.4. Briefings to tasked unit personnel on the plans and procedures to be used at the deployment location.
1.4.3. Major commands must ensure adequate explosives safety support is available at the deployment location during planning and beddown.
1.4.4. The Q-D priority to maintain during planning and employment of combat forces is: a) maintaining intermagazine (IM) separation, b) meeting intraline (IL) separation, and c) protecting unrelated personnel.
1.4.5. See paragraph 4.11. for explosives site planning requirements.

Section B--Assessing Explosives Risks

★1.5. Commanders Risk Assessment. Explosives safety criteria in this manual help commanders make informed decisions on the proper mix of combat readiness and safety. Departure from explosives safety standards must only result from operational necessity or other compelling reasons in direct support of the mission. Figure 1.1 is a generalized model for risk management. It involves three risk factors: mishap severity, mishap probability, and mission exposure. The level of risk may be quantifiable (number of casualties, aircraft destroyed, etc.), or may be a subjective decision. The local commander is responsible for the decision to accept additional risk. See paragraph 4.10, and Base Explosives Exception Matrix **(**BEEM**)** at paragraph 5.7. Obtain mishap data to support risk assessments from HQ AFSC/SEP, 9700 Avenue G SE, Kirtland AFB NM 87117-5671.

Figure 1.1. Risk Assessment Decision Tree.

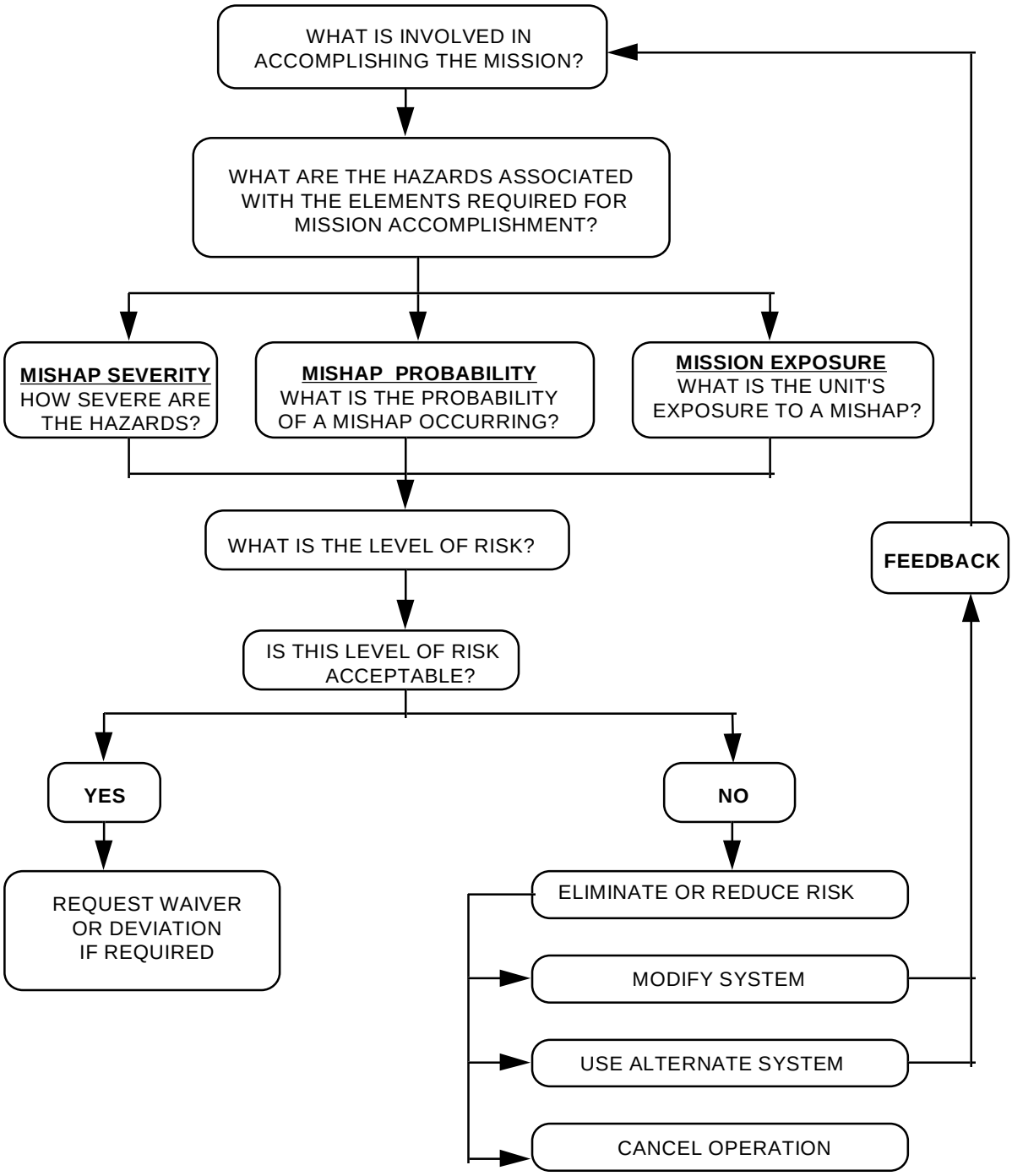
WHAT IS INVOLVED IN ACCOMPLISHING THE MISSION?
WHAT ARE THE HAZARDS ASSOCIATED WITH THE ELEMENTS REQUIRED FOR MISSION ACCOMPLISHMENT?
MISHAP SEVERITY
HOW SEVERE ARE THE HAZARDS?
MISHAP PROBABILITY
WHAT IS THE PROBABILITY OF A MISHAP OCCURRING?
MISSION EXPOSURE
WHAT IS THE UNIT'S EXPOSURE TO A MISHAP?
WHAT IS THE LEVEL OF RISK?
FEEDBACK
IS THIS LEVEL OF RISK ACCEPTABLE?
YES
NO
REQUEST WAIVER OR DEVIATION IF REQUIRED
ELIMINATE OR REDUCE RISK
MODIFY SYSTEM
USE ALTERNATE SYSTEM
CANCEL OPERATION

Chapter 2

EXPLOSIVES SAFETY REQUIREMENTS

Section A--General Guidance

2.1. General Information. This section provides general information about explosives and safety requirements for operations involving explosives. The absence of specific guidance on a particular operation does not imply that safeguards are not applicable.

2.2. Personnel Qualifications. Personnel who work with explosives will be trained and qualified in the tasks to be performed. They must understand all safety standards, requirements, and precautions that apply to their operations. The supervisor must be knowledgeable of all the hazards involved in the operation, convey emergency procedures to the workers and visitors, and maintain strict housekeeping standards. The supervisor must also know what steps to take when abnormal conditions arise.

2.3. Locally Written Instructions. Develop written instructions, approved by the squadron commander or equivalent, for explosives operations. If other documents such as technical orders and safety briefings cover all the items required in paragraph 2.4. below, separate written instructions are not required.
2.3. (AFRC) Specific operating instructions (OI) approved by the appropriate commander are required for all explosives operations and for all licensed facilities.
2.3.1. Coordinate instructions with the installation safety office and all other involved organizations.
2.3.2. Ensure instructions are available at the work site.
2.3.3. All personnel must understand the procedures prior to beginning an explosives operation.
2.3.4. Written procedures are not required for explosives ordnance disposal (EOD) emergency operations in connection with approved render safe procedures.
2.3.5. Locally produced checklists and work cards concerning nuclear operations require MAJCOM approval, according to Technical Order (TO) 00-5-1, *Air Force (AF) Technical Order System*.
2.3.6. Written procedures will be in the language workers understand.

2.4. Contents of Locally Written Instructions. Include the following information, as applicable, in locally written instructions.
2.4.1. Explosives limits, including the hazard class/division and compatibility group of the explosives involved.
2.4.2. Personnel limits, including workers and others. See paragraph 2.5.
2.4.3. Exact locations where operations will be done.
2.4.4. Safety requirements, to include special requirements for personal protective clothing and equipment.
2.4.5. Step-by-step procedures for doing the task. (Refer to specific steps in the TO for applicable portions of the operation.)
2.4.6. Actions to be taken during an emergency or when abnormal conditions are noted.

2.5. Personnel and Explosives Limits. Design explosives operations to ensure compliance with the *Cardinal Principle of Explosives Safety*. This principal is: Expose the minimum number of people to the minimum amount of explosives for the minimum amount of time. Supervisors are responsible for enforcing personnel and explosives limits. However, good industrial safety practices may dictate use of the buddy system. Performance of EOD procedures requires a minimum of two qualified people (one worker and one for safety back-up and to detect errors in procedures). If deployed on a mission where performance of EOD procedures is likely, deploy a minimum of two qualified EOD people.
★2.5.1. Posting Explosives Limits. Clearly post the authorized net explosive weight (NEW) and hazard classification/ division (HC/D) of each cubicle, magazine, pad, or building where explosives are stored, maintained, inspected, or handled. An explosives license properly displayed fulfills this requirement for licensed locations. See paragraph 2.35.5.
2.5.2. Posting Operating Limits. For operating locations, clearly post the NEW limits for the operation being conducted. The sited NEW limit for the location is usually more than the NEW limit for an operation since siting may be dependent on the highest NEW permitted at the operating location. These limits may be expressed in units other than weight, such as “bombs”, “fuzes” or “missiles”, so it will be easier to control. Include these limits in written procedures. Posting explosives limits is unnecessary on demolition or EOD training ranges or other similar locations where posting is impractical. However, include limits in local written procedures.
★2.5.3. Posting Personnel Limits. Clearly post personnel limits for the operations being conducted at each explosives operating location. Posted limits will distinguish between supervisors, workers and casuals and be included in written procedures. Casuals are persons not normally part of an explosives operation but have duties that require their presence,

such as quality assurance, safety or inspection personnel. Visitors are non-essential personnel with limited access. Stop operations when visitors are present. Do not post personnel limits for storage locations or licensed storage locations. For operations where posting is impractical, such as ranges, local written procedures containing the information will suffice.

2.6. Health and Environment.

2.6.1. Using organizations must ensure Bio-environmental Engineering Services (BES) conducts a health hazard assessment of the work area and operation when dust or concentrations of vapors, fumes, or gases from explosives, equipment, or other chemicals in the work area are present. The squadron commander must approve the assessment before operations may begin.

2.6.2. Using organizations must ensure each explosives operation is evaluated for compliance with environmental standards. The evaluation must include all hazardous wastes generated during all phases of the operation. Written procedures will identify requirements for the control, storage and disposition of hazardous wastes.

2.7. Static or Public Display. Do not display, load, or install live explosives items on display aircraft. Do not render explosives items inert for this purpose unless authorized by the specific Air Force Materiel Command (AFMC) item manager or system program office.

2.7.1. Remove live or expended ammunition from aircraft gun systems or safe the gun systems mechanically and electrically before placing the aircraft on display.

2.7.2. Operational aircraft may be displayed without removing egress and life support systems explosives components. Take proper technical order safety precautions. Ensure constant surveillance of visiting personnel near actuating controls.

2.7.3. Remove ejection cartridges from external stores release systems or ensure safety pins and devices cannot be easily removed. Isolate firing circuits (for example, circuit breakers pulled).

2.7.4. Refer to AFI 11-209, *Air Force Participation in Aerial Events*, and TO 00-80G, *Make Safe Procedures For Public Static Display*, for procedures concerning static display of aircraft.

2.7.5. Do not grant the public access to explosives storage or operating locations where the duties of the agencies don't require such contact.

2.7.6. Munitions displays must marked be in accordance with TO 11A-1-53, *Identification of Empty and Inert Loaded Ammunition Items and Components*, and certified in accordance with TO 11A-1-60, *Inspection of Reusable Munitions Containers and Scrap Material*.

2.7.7. Only authorized personnel will perform demilitarization procedures.

2.8. Safety Certification of Munitions Systems. All non-nuclear munitions systems used by the Air Force require safety certification as specified in AFI 91-205, *Non-Nuclear Munitions Safety Board*.

2.8.1. Local purchase of commercial explosives or munitions items is prohibited unless they are approved for local purchase by OO-ALC/LIW, 6064 Dogwood Avenue, Hill AFB, UT 84056-5816.

2.8.2. Submit requests for approval according to AFI 21-202, *Combat Ammunition System Procedures*, paragraph 3.17. Emergency requirements are approved by HQ AFSC/SE, 9700 Avenue G SE, Kirtland AFB NM 87117-5671. Air Force laboratories or research and development activities are exempt from these purchasing limitations.

2.9. Fireworks Displays. Commercial fireworks are extremely hazardous, even in the hands of trained experts. Air Force personnel, on or off-duty, must not take part in the transportation, storage, setup or functioning of commercial fireworks for on-base fireworks displays. Units must contract with properly licensed commercial firms to provide all necessary transportation, storage and security, setup, and functioning of fireworks. Contractors must comply with safety guidelines in NFPA 1123, *Code for Fireworks Display*.

2.10. Housekeeping. The following are minimum precautions:

★2.10.1. Do not commingle waste materials, such as oily rags, combustible scrap, wood, paper, and flammable packing materials with explosives. Place waste materials in separate, approved, properly marked containers. Place containers outside facilities (except for containers required at work locations during operations). Empty working location containers as often as needed, but at least once each workday or shift. For hazardous substances, contact the base environmental management office for additional guidance.

2.10.1.1. Provide grounded, covered self-closing containers for munitions residue. Cover scraps or rags with water or oil if this does not add to the hazard. Number 10 mineral oil is useful for covering pyrotechnic, tracer, flare, and similar mixtures. If using water, immediately immerse scrap to reduce production of dangerous gases.

2.10.1.2. Remove munitions residue at frequent intervals and before leaving at the end of the duty day or shift. Place in the disposal area or a segregated temporary collection point. When using isolated collection points, set up time and quantity limits to ensure timely movement of the material to the disposal area. Don't "store" munitions residue and scrap material in the disposal area. Dispose of munitions residue in accordance with environmental standards. Develop local written procedures for disposal operations.

2.10.2. Do not use sweeping compounds containing wax or oil on conductive floors. Do not use cleaning agents that include caustic alkalis in locations containing "exposed explosives" (sensitive explosives compounds may be formed). Clean "exposed explosives" from the floor with hot water or steam. Use non-abrasive sweeping compounds. Such compounds are often combustible but not volatile. (Closed cup flash point must not be less than 230 ^{o} F.)

★**2.11. Smoking.** Allow smoking in an explosives area or location only in specifically designated locations, where "authorized smoking areas" signs are posted. A “no smoking” sign will be posted at each entrance to an explosives storage area. In areas containing exposed explosives, include a notice that flame-producing devices must be turned over to the entry controller or placed in a container provided. Display a certification of approval by the fire chief in each designated smoking location. Coordinate proposed locations with the installation safety office prior to submitting to the fire chief.
2.11.1. AFOSH Standard 127-100, *Aircraft Flightline Ground Operations and Activities*, Chapter 1, governs smoking on the flightline.
2.11.2. Do not smoke in, on or within 50 feet of any motor vehicle, trailer, rail car, or material handling equipment loaded with explosives items.
2.11.3. Provide suitable self closing, properly marked receptacles for cigarette and cigar butts, and pipe heels.
2.11.4. Electrical push-button type lighters that cut off when pressure is released or when lighter tips over are recommended.
2.11.5. A fire extinguisher will be available as determined by the fire chief.
2.11.6. Persons wearing clothing contaminated with flammables, explosives or other hazardous materials are not allowed in smoking areas.

2.12. Handling Explosives and Movement Precautions. Only trained personnel under the supervision of an individual who understands the hazards and risks involved in the operation are to handle explosives. Follow this guidance:
2.12.1. Handle detonators, initiators, squibs, and other such electrically or mechanically initiated devices in protective containers. Use containers designed to prevent item-to-item contact. Mark to identify the contents.
2.12.2. Do not use bale hooks to handle explosives.
2.12.3. Do not use nails to secure covers or make repairs on explosives containers unless there is no hazard to the explosive item or danger of penetrating protective coverings. Exercise special care when using pneumatic or cartridge activated nail guns.
2.12.4. Do not tumble, drag, drop, throw, roll, or "walk" munitions. Containers designed with skids may be pushed or pulled for positioning.
2.12.5. Do not roll unpalletized conventional high explosive bombs or other explosives authorized by the item technical order (TO) unless lugs or other projections have been removed or if they are protected by dunnage rails.
2.12.6. Do not use conveyors, chutes, hand trucks, or forklifts in atmospheres and locations where they will create hazards. Interlock and support sections of roller conveyors used to move explosives.
2.12.7. Do not use boxes containing explosives or munitions to support conveyors.

2.13. Hunting. Hunting may be permitted in and around the munitions storage area if Public Traffic Route (PTR) distance is maintained from all potential explosion sites (PES). Because of the varying conditions and circumstances, procedures and additional restrictions will be determined by MAJCOM and incorporated into the MAJCOM supplement to this manual.

★**2.14. Training Ammunition.** Firing blank ammunition in weapons (less than .50 caliber) fitted with blank adapters is permitted within the munitions storage area. Coordinate operating instructions with the installation weapons safety office and obtain approval from the munitions storage area commander or flight chief. Establish detailed procedures and include the following provisions: a designated disinterested official certify only blanks are loaded; fire extinguishers readily available; misfire procedures; turn-in expended brass as munitions residue; notify appropriate agencies (i.e., safety, munitions flight chief, fire department, and hospital).

2.15. Simulators and Smoke Producing Munitions. See paragraph 2.35 for licensing requirements. The following applies to the use of these devices during exercises and training:
★2.15.1. Only US Air Force stock-listed items are authorized for use. Other military services will use DoD approved items only, when using USAF ranges or facilities.
2.15.2. Only trained personnel can prepare and activate these devices. Explosives ordnance disposal (EOD) will provide training on an annual basis to personnel whose duties require them to initiate training simulators. On bases where EOD support is not available, qualified munitions personnel will provide this training. It is the responsibility of the user organization to request training and maintain training records. Higher headquarters evaluation teams using these devices must present proof of training to the base safety office, prior to use.
2.15.2. (AFRC) AFRC qualified personnel are those individuals, munitions, EET, safety, etc., trained and certified by EOD on an annual basis to provide simulator and smoke producing munitions training to other base personnel. As a minimum training will be both academic and practical. Academic training includes item description and associated hazards; safety and handling precautions; technical data warnings/cautions; preuse/postuse inspection criteria; misfire, DUD, and munitions residue disposition procedures. Practical training will not commence prior to successful completion of the academic portion.

After completion of all training issue individuals an AF Form 483, **Certificate of Competency**, identifying what types of munitions they are certified to activate.

2.15.3. Minimum distances.

★2.15.3.1. Personnel or vehicle: Maintain a minimum of 125 feet separation. Personnel who initiate these munitions may be closer than 125 feet, but they should be as close to 125 feet as possible and have their back to the munitions. Exception: no specific distance for non-toxic colored smoke grenades. Avoid the smoke or follow actions required in Table 2.3.

2.15.3.2. Facilities without facing window: Maintain a minimum separation of 100 feet.

2.15.3.3. Facilities with facing window: Maintain a minimum separation of 200 feet

2.15.3.4. Hardened facilities, including hardened aircraft shelters: Maintain a minimum separation of 50 feet.

2.15.3.5. Petroleum, oil and lubricants storage: Maintain a minimum separation of 200 feet.

2.15.3.6. Aircraft in the open: Maintain a minimum separation of 100 feet or 200 feet if aircraft are explosives loaded.

2.15.3.7. Explosives operating locations, holding areas, open storage areas or butler-type storage facilities: Maintain a minimum separation of 200 feet.

2.15.3.8. Above ground magazines of block, brick, or concrete construction and from earth covered magazines: Maintain a minimum separation of 50 feet.

2.15.3.9. Required distances may be reduced by barriers designed in accordance with AFJMAN 32-1092 (AFM 88-22), *Structures to Resist the Effects of Accidental Explosions*. Provide the design criteria to HQ AFSC/SE for approval.

2.15.4. Smoke from grenades and pots is sometimes toxic in high concentrations. Contact Environmental Management and the Fire Department prior to use. These items, along with generators and flares present a fire hazard. Remove combustible materials before functioning. Consider winds and fire hazards such as dry grass or fire bans. Consider using a barrier to control spread of heat during functioning of grenades and smoke pots.

2.15.5. Ground burst or hand grenade simulators present a blast hazard. Exercise caution around people, facilities and equipment. Free the area of combustible material within a ten foot radius. Monitor for proper functioning and disposal of residue. Notify EOD or other qualified personnel when a munition malfunctions.

2.15.6. Dispose of expended simulators and smoke pots in accordance with environmental standards and TO 11A-1-60.

2.16. Training and Exercise Plans. The Exercise Team Chief prepares a risk assessment and detailed list of explosives authorized for use in the exercise and a detailed list of locations where munitions will be deployed. The installation commander must approve the plan. Include safety personnel in exercise planning and risk assessment.

2.16.1. Commanders will ensure personnel not normally associated with explosives operations and exercises are not exposed to explosives hazards.

2.16.2. Explosives will not be taken into public assembly places except when required by essential mission needs or immediate security requirements.

2.17. Military Working Dog Explosives. Military Working Dog hazard class/division (HC/D) 1.1 explosives training aids may be transported and handled by qualified personnel in areas which provide realistic and effective training.

2.17.1. Preclude exposure of personnel not related to the training through prudent scheduling and selection of training sites. Post proper fire symbols at training sites.

2.17.2. Train using locally approved operating instructions. These instructions must include a documented post-training inventory of explosives samples ensuring no explosives are inadvertently left at the training site or discarded.

★2.17.3. Inform the base safety office, the Fire Department, and EOD (if applicable) before conducting operations.

Section B--Fire Protection

2.18. Guidance. Fire or excessive heat is one of the greatest threats to explosives. This section gives procedures for dealing with these hazards.

2.18.1. Each unit and installation fire protection agency with explosives operations, develop pre-fire plans as required by AFI 32-2001, *Fire Protection*. Include all explosives locations.

2.18.1 (AFRC Bases Only) Coordinate all fire department training plans relating to explosives with the weapons safety office. The base fire chief ensures all mutual aid departments are aware of the placards and symbols used by USAF and how to fight a fire involving explosives

★2.18.2. Each Air Force fire alarm central communications center (FACC) will have an area map or computer generated display showing all explosives areas or locations and their fire and hazard symbols to include licensed locations. This map must also show adjacent facilities which are at risk from explosives. Whenever possible, ensure all sites have bona fide location numbers.

2.18.3. Personnel in charge of explosives operations must promptly notify the fire department each time there is a change in fire or hazard symbols. Whenever possible, ensure all sites have bona fide location numbers.

2.19. Fire Drills. Fire drills will be held within the explosives storage area at intervals not to exceed 6 months.

2.19. (AFRC) Maintain records of fire drills according to AFMAN 37-139, *Records Disposition Schedule*. Notify the weapons safety office no less than 24 hours prior to actual drill.

2.19.1. Drills are conducted to train fire-fighting forces and unit personnel, and ensure other personnel involved, understand their duties, and evaluate fire alarm systems, fire-fighting equipment, and evacuation procedures.
2.19.2. Coordinated fire drills involving a fire department response with the fire chief. This does not preclude unannounced drills of a fire department's response capabilities, provided coordination with the fire chief is accomplished at least 30 minutes before starting the drill. Personnel responsible for conducting these drills will ensure all involved are aware that the drill is an exercise, and not an actual fire.
2.20. Alarms. Besides automatic alarm systems required by Military Handbook 1008, *Fire Protection for Facilities*, or other directives, install an audible manually operated evacuation alarm at each explosives operating building. (such as a bell, triangle or siren)

2.21. Fire Prevention Requirements.

★2.21.1. Heat-Producing Devices. Limit the use of devices that produce temperatures higher than 228° F (109° C) in any explosives area to essential and temporary use. Develop written instructions, coordinated through the installation safety office and approved by the fire department, covering the location, purpose, duration, and details of general and explosives safety precautions. Properly installed approved furnaces and electrical space heaters are exempt. Heat-producing devices are not allowed where exposed explosives are present. Ensure personnel are qualified on the equipment prior to use.
2.21.2. Vegetation Control. The local commander determines vegetation control.
2.21.2.1. The primary purpose of vegetation control is to limit the probability of combustible vegetation catching fire and to slow the spread of vegetation fires.
2.21.2.2. Except for firebreaks, maintain grounds in or near explosives areas or locations as unimproved grounds. Limit maintenance to that which is necessary to prevent erosion or other waste of natural resources.
2.21.2.3. Balance the level of vegetation control with operational factors, such as cost to control, security, erosion prevention, and passive defense (camouflage).
2.21.2.4. Use varieties of vegetation that are resistant to burning where feasible. Don't use herbicides or soil sterilants if complete removal of vegetation will tend to cause soil erosion. Select vegetation for earth cover of magazines so that their weight or root system will not damage the structure. Do not allow dead or cut vegetation to accumulate.
2.21.2.5. When animals are used for vegetation control, avoid overgrazing on barricade surfaces and igloo earth cover to prevent erosion.
2.21.2.6. Where vegetation growth is ineffective in preventing erosion, use a layer of about two inches of pressure-applied (Gunite) concrete or asphalt mixture or other suitable erosion prevention methods.
2.21.3. Firebreaks. Where environmental and security factors allow, maintain 50-foot firebreaks around each PES except igloos. Maintain 5 feet around igloo ventilators.
2.21.4. Separation Criteria for Controlled Burning. Don't conduct controlled burning within 200 feet of any explosives location. The fire chief approves and provides oversight for controlled burning of vegetation. Close windows, doors and ventilators of facilities containing explosives within 600 feet of burning operations.
2.21.4.1. Control firebrands, sparks, and hot ashes.
2.21.4.2. Do not conduct burning operations when wind velocity exceeds or is forecast to exceed 5 miles per hour.
2.21.4.3. The fire chief determines fire-fighting personnel and equipment to be present during burning operations.
2.21.5. Flammable Liquids for Cleaning. Don't use flammable liquids for cleaning purposes within an explosives area or near explosives, except as authorized by TO. Confine use to specific designated work areas. In-use stocks may not exceed a one day supply. Store in approved safety containers or dispensers.
2.21.6. Paint and Other Flammable Materials. Store only small stocks of flammable materials, such as paints and solvents required to support explosives maintenance operations. AFOSH Standard 127-43, *Flammable and Combustible Liquids*, and TO 42A2-1-4, *Storage Control of Organic Coating Materials (Paints and Allied Materials)*, apply.
2.21.6.1. Do not store materials that add fuel sources, such as wood, paper and rags with flammables.
2.21.6.2. Open containers of flammable materials only when in use.
2.21.6.3. For outdoor storage, place flammable materials in weatherproof containers.
2.21.6.4. Locate flammable storage at least 50 feet from explosives locations.
2.21.6.5. Comply with AFOSH Standard 127-43 when storing a limited supply of paint in individual rooms of explosives operating facilities.
2.21.6.6. Make available at least one fire extinguisher suitable for the type of material involved.
2.21.6.7. Store in approved flammable storage lockers as required by AFOSH Standard 91-43.
2.21.7. Operating Support Equipment. Use the following guidance when operating support equipment (not including vehicles) powered by internal combustion engines. Operations in hardened aircraft shelters are exempt.
2.21.7.1. Locate equipment no less than 25 feet from explosives.
★2.21.7.2. Place aircraft ground support equipment as far away as the length of the power cord, the length of the hose, or other equipment limitation will allow.
2.21.7.3. Equipment may be closer provided adequate ventilation and a fire resistant dividing wall are provided.
2.21.7.4. Equipment designed into and installed as part of an operating or storage facility is exempt.
2.21.7.5. Don't refuel equipment within 100 feet of explosives.
2.21.8. Stacking Combustible Material. Use the following guidance:

2.21.8.1. Stack containers, dunnage, lumber and so forth in an orderly manner.
2.21.8.2. Limit stacks to 9,000 cubic feet.
2.21.8.3. Don't place bulk stacks of combustible materials closer than 100 feet from explosives locations.
2.21.8.4. If necessary, stack working quantities in the vicinity of explosives. Remove all of the material upon completion of the operation or at intervals that prevent hazardous accumulation.
2.21.8.5. Provide suitable fire protection equipment.
2.21.8.6. When needed to prepare for combat operations, temporarily stack in or near the explosives storage site those empty containers, dunnage and lumber that cannot be removed while the work is in progress.
2.21.8.7. Keep stacks stable and separated as far as practical from operations.

2.22. Fire Extinguishers.
2.22.1. Unless otherwise directed by the fire chief, provide a minimum of two serviceable fire extinguishers, suitable for the hazards involved, for immediate use at any location where explosives are being handled. See paragraph 2.35 for licensed locations.
2.22.2. Make at least one fire extinguisher available for each item of powered materials handling equipment used to handle or transport explosives. Individual fire extinguishers are not required for each piece of handling equipment located at individual explosives locations if the requirements of paragraph 2.22.1 are met; however, if handling equipment is used to transport explosives between locations, individual fire extinguishers are required.
2.22.3. Provide each explosives-laden vehicle used for transport at least two portable 2A:10BC rated extinguishers. If explosives-laden vehicles are parked at an explosives location, additional fire extinguishers beyond those required in paragraph 2.22.1 are not required. If the vehicle leaves the explosives location, additional extinguishers are required.
2.22.4. Provide flightline fire extinguishers for each aircraft according to munitions loading manuals and AFOSH Standard 127-56, *Fire Protection and Prevention*.

★2.23. Storing Water for Firefighting. Adequate water to fight fires must be available. The capacity of the water supplies will be determined by the authority having jurisdiction. (See Table 3.3, “Above Ground Utilities” and Note 24 for additional guidance.)

2.24. Emergency Withdrawal Distances.
2.24.1. Essential Personnel. The on-scene commander, or senior ranking individual determines, who are essential emergency personnel and what distances they should maintain.
2.24.2. Non-Essential Personnel. For guidance on how far to withdraw nonessential personnel during fires involving explosives, see TO 11A-1-46, *Fire Fighting Guidance, Transportation and Storage Management Data*, Table 1-2. When explosives are not involved in fire, such as dropped munitions or partially armed munitions, clear the area initially to a distance of 300 feet. After evaluation of the situation, the on-scene commander may adjust the withdrawal distance for nonessential personnel. Nuclear weapons withdrawal distances are listed in TO 11N-20-11, *General Fire Fighting Guidance*. Use Table 2.1 when fire is involved.

2.25. On-Scene Placarding Guidance to Emergency Personnel. Signs are used as a back-up precaution for alerting response personnel that explosives or chemicals are present. Use DoD symbols when the explosives or chemicals are not in the transportation mode. Use Department of Transportation (DOT) placards for transporting explosives or chemicals. Signs are based on the hazard class/division of the explosives. TO 11A-1-46, *Fire Fighting Guidance, Transportation and Storage Management Data*, gives HC/D for each Air Force stocklisted munitions item.
2.25.1. Explosives Fire Symbols. These symbols represent explosives divisions 1 through 4. See Table 2.2 for placarding divisions 5 and 6. The hazard decreases as the fire symbol number increases. The hazard is based on the burning or explosives characteristics of the material. Fire symbols do not apply to liquid propellants, except for symbol 1, which is used to indicate a detonation hazard of Group IV propellant. Fire protection for insensitive high explosives (both bulk and filled items) is based on their equivalent storage classification.
2.25.1.1. Placards representing each of the four fire symbols are distinctively shaped, with the division number shown. See Figure 2.1.
2.25.1.2. The hazard and fire-fighting precautions for each symbol are summarized in Table 2.2.
2.25.2. Chemical Hazard Symbols. These symbols are used to identify sites which contain pyrotechnic and chemical munitions or agents.
2.25.2.1. Hazard symbols vary with the type of agent. These symbols are described in Figure 2.2.
2.25.2.2. The hazard each symbol represents and the fire-fighting precautions are summarized in Table 2.3.
2.25.3. Firefighting Direction Symbol. The "apply no water" sign is intended for use with hazardous materials where use of water may intensify the fire, increase the risk of explosion, or spread the fire. This symbol is described in Figure 2.2.
2.25.4. Symbol Dimensions. The dimensions shown in figures 2.1 and 2. 2 are the normal minimum sizes. Half-size symbols may be used when applicable, such as on doors and lockers inside buildings and hangars.

Table 2.1. Minimum Withdrawal Distances (in feet) for Explosives Involved in Fire. (All notes apply)

1.4	Minimum Distance		300
1.3	Minimum Distance		600
1.2 1.6	Minimum Distance		2500
1.1 1.5	Unknown Quantity	Aircraft, Truck, Tractor, Trailer, Facility	4000
		Railcar	5000
	Transportation Known Quantity	500 lbs or less, all modes	2500
		More than 500 lbs, railcar	5000
		More than 500 lbs, all other modes including aircraft	4000
		All quantities bombs & explosives greater than 5 in. caliber	4000
	Facilities Known Quantity	15,000 lbs or less	2500
		More than 15,000 lbs, less than 50,000 lbs	4000
		More than 50,000	K105

NOTES:

1. For quantities of HC/D1.3 over 100,000 lbs withdrawal distance is equal to K16.
2. When accidents occur and there is no fire, the on-scene commander will assess the risk and determine the withdrawal distance. See paragraph 2.24.

2.25.5. Obtaining Symbol Decals. Decals for fire and chemical hazard symbols may be obtained through normal Air Force supply channels. National stock numbers (NSN) of standard and half-size decals are listed in Figures 2.1 and 2.2. Make backing material for fire symbol decals the shape of the decal and non-combustible

2.25.6. DOT Explosives Placards. Explosives placards used for transportation of explosives are identified in Subpart F of Title 49-Code of Federal Regulations (CFR) *Transportation*. Use these placards for the transportation of explosives as directed in paragraph 2.71.2. See TO 11A-1-46 for the HC/D assigned to Air Forces titled munitions.

★2.25.7. Posting Symbols. Post the fire symbol that applies to the most hazardous material present at nonnuclear explosives locations (refer to tables 2.2 and 2.3 for applicable symbols). Ensure symbols are visible from all approach roads. When one fire symbol applies to all explosives within a storage area or on a service road, it may be posted at the entry control point or row entrance. Post individual fire/chemical hazard/apply no water symbols on each door of a multicube storage magazine when the multicube is sited as a multicube versus a single magazine. The self contained breathing apparatus (SCBA) and other protective clothing and equipment prescribed for use in Table 2.3 are required for emergency response personnel (such as Fire Department and EOD) only. However, they must be used if required for use by other applicable technical orders or other DoD/USAF publications. See AFI 32-4002, *Hazardous Material Emergency Planning and Response Compliance*, for further guidance.

2.25.7.1. Post symbols on exterior and interior entrances to small rooms in buildings that are licensed for storing quantities of explosives. Also mark lockers or containers with the proper symbol. If the building is exempt from Q-D according to paragraph 2.35 and the fire chief approves, fire symbols on exterior of buildings are optional.

2.25.7.2. Identify aircraft loaded with nonnuclear weapons with symbols posted at each aircraft or aircraft shelter. One fire symbol may be posted at the entry control point to an aircraft area; the fire symbol will be the highest class/division located with the aircraft area. (Entry point meaning the point of entry for fire-fighting personnel.) Notify the Fire Alarm Communication Center (FACC) when each aircraft is loaded or unloaded. Give the aircraft tail number, parking location, and the type of explosives involved. During mass loading of three or more aircraft, when a fire truck is present, notify the FACC as soon as the last loading is complete.

2.25.7.3. Remove the symbols if the explosives or chemical agents are removed from a facility or location. The person in charge of the operation is responsible for posting or changing the symbols. The FACC will be notified each time fire or hazard symbols are changed.

2.25.7.3. (AFRC) Develop local written instructions assigning responsibilities to notify base fire department on any changes to explosives status of an explosives operation or a location.

★Figure 2.1. Fire Symbols.

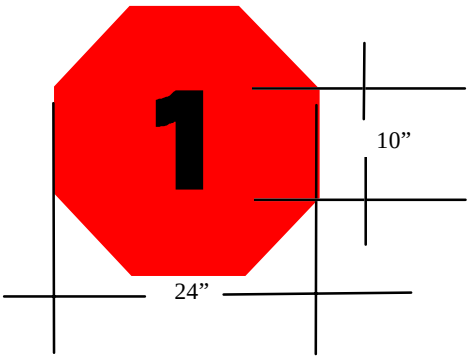

Fire Division 1 or 5

24” NSN 7690-01-082-0290
12” NSN 7690-01-081-9581

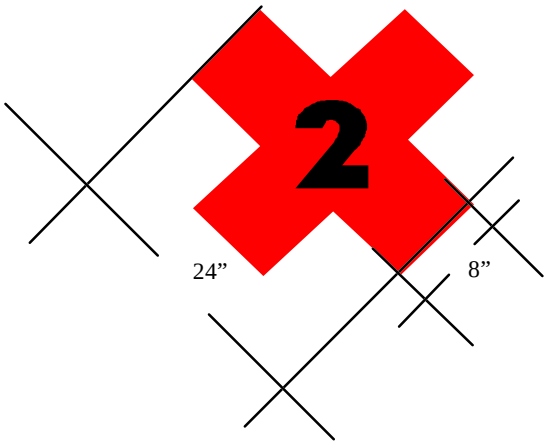

Fire Division 2 or 6

24” NSN 7690-01-082-0289
12” NSN 7690-01-087-7340

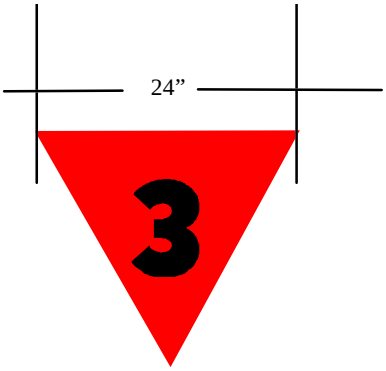

Fire Division 3

24” NSN 7690-01-081-9583
12” NSN 7690-01-081-9582

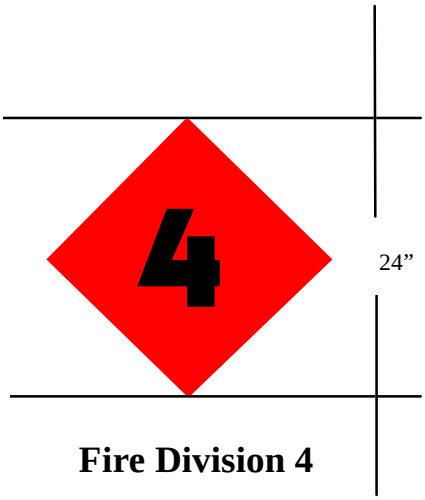

Fire Division 4

24” NSN 7690-01-082-6709
12” NSN 7690-01-081-9584

Background: Orange # 12240 (Fed. Std 595A)
Numbers: 10” High and 2” Thick: Black # 17039 (Fed. Std)595A)

Figure 2.2. Chemical Symbols.

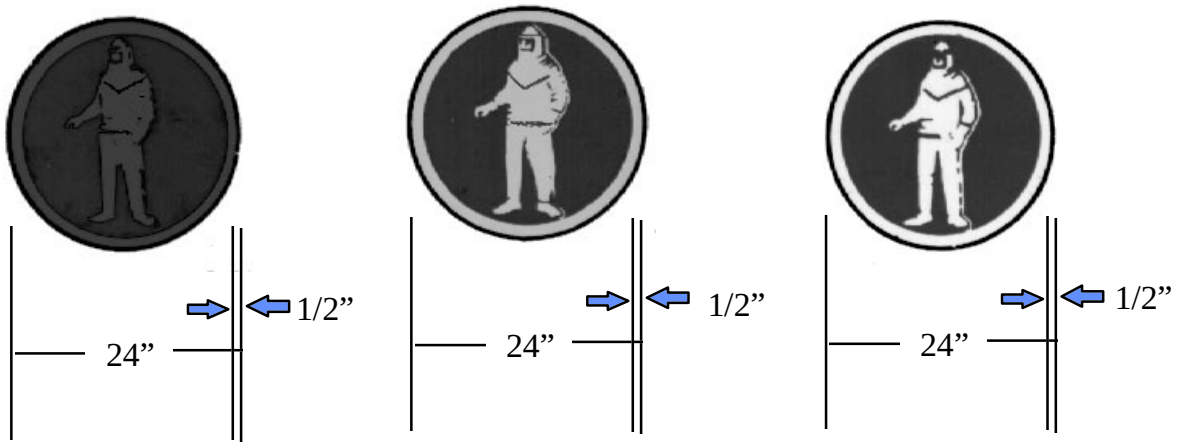

Symbol 1. Wear full protective clothing

Background is blue, Figure and rim are:

Red for Set 1 Protective Clothing.
24” NSN 7690-01-081-9586
12” NSN 7690-01-081-9585

Yellow for Set 2 Protective Clothing.
24” NSN 7690-01-081-9587
12” NSN 7690-01-082-0281

White for Set 3 Protective Clothing.
24” NSN 7690-01-083-6272
12” NSN 7690-01-081-9588

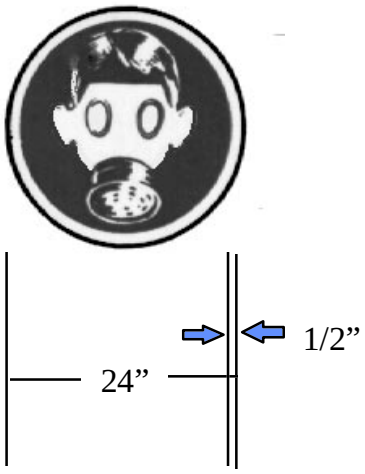

Symbol 2. Wear Breathing Apparatus

Background is blue
Figure and rim are white.
24” NSN 7690-01-081-9589
12” NSN 7690-01-082-6710

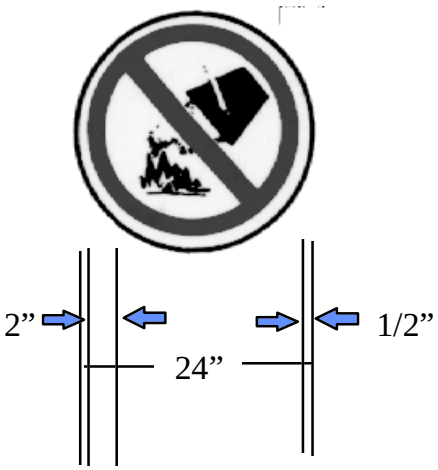

Symbol 3. Apply No Water

Background is white. Circle and diagonal are red. Figure is black.
24” NSN 7690-01-082-2254
12” NSN 7690-01-082-0292

Colors per Fed Std 595A or GSA Catalog

Red	#11105	Yellow	#13538
Blue	#15102	White	#17875
Black	#17038		

2.25.7.4. Make backing for fire symbol decals the shape of the decal and out of non-combustible material. If heat from the fire burns off the numbers, the fire department can act on the shape.
2.25.8. Exceptions to Posting Fire Symbols.
2.25.8.1. Locations with aircraft having only exempted devices according to paragraph 3.25.4. This exception does not apply to explosives cargo.
2.25.8.2. Missile sites with a single type of weapon system, such as ICBM sites.
2.25.8.3. Locations with 1000 rounds or less of HC/D1.4 small arms ammunition.
2.25.8.4. When, by agreement, host nation symbols are used.
2.25.8.5. When, for emergency security purposes the responsible commander temporarily orders them removed.
2.25.8.6. Locations storing or maintaining nuclear weapons or both nuclear and nonnuclear weapons. Maintain a map or listing of munitions locations. For nuclear weapons use TO 11N-20-11, *General Firefighting Guidance*, line numbers or symbols. Provide this information to the fire department. Update as changes occur.
2.25.8.7. Aircraft loaded with nuclear weapons or with nonnuclear and nuclear weapons within the same designated area.
2.25.8.8. Aircraft in a designated explosives parking area if described in a local publication. Include the class/division, governing symbol, emergency procedures and the requirement to notify the fire department.

Table 2.2. Fire Symbol Hazards and Actions.

Fire Symbol	Materials	Hazard	Action/Remarks
1	1.1 Explosives and class IV liquid propellants and 1.5 munitions	Mass Detonation	1. Do not fight fire unless rescue attempt is planned. 2. If there is suitable separation to symbol 1 materials and fire chief approves, fire-fighting forces may attempt to extinguish the fire. 3. If personal safety is in doubt, take cover.
2	1.2 Ammunition and explosives and 1.6 extremely insensitive detonating substances (EIDS)	Explosion with fragments	1. Give alarm; attempt to extinguish fire if in early stage. 2. Firefighting forces should fight fire. If not possible, prevent spread of fire. 3. Detonation of items could occur. Provide protection from fragments.
3	1.3 Ammunition and explosives	Mass Fire	1. May be fought if explosives not directly involved. 2. If WP munitions are involved, smoke is liberated. a. WP munitions may explode. b. Immerse Phosphorus in water or spray with water continuously. 3. For fires involving HC and incendiaries use dry sand or dry powder in early stage. 4. For fires involving pyrotechnics and magnesium incendiaries. a. Protect adjacent facilities and equipment. b. Do not use carbon dioxide, Halon extinguishers or water on or near munitions. c. Allow magnesium to cool unless upon flammable material. In this case, use a 2-inch layer of dry sand or powder on the floor and rake the burning material onto this layer and re-smother.
4	1.4 Ammunition and explosives	Moderate fire	1. Fight these fires. 2. Expect minor explosions and hot fragments.

★Table 2.3. Chemical Symbol Hazards and Actions.

Chemical Symbol	Name of Chemical Family	Comp Group	Type Agent	Back-Ground Color	Bands	Hazard	Action or Remarks
Full Protective Clothing- Set 1 (Red)[1]	Nitrogen Tetroxide (N_2O_4)	K	Fuel Oxidizer	None	None	Highly Toxic as aerosol/vapor	1. Withdraw upwind 2. If explosion does not occur, approach from upwind and extinguish fire. 3. Decontamination may be required.[10]
Full Protective Clothing- Set 2 (Yellow)[2]	Hydrazine (MMH), (UDMH)	K	Fuel	None	None	Toxic as aerosol/vapor	1. Withdraw upwind 2. Approach from upwind and extinguish fire. 3. Decontamination may be required.[10]
	Chloroacetophenone (CN)[6][12]	G	Tear	Gray	Red		
	Liquid Chloroacetophenone (CN)[6][12]	G	Tear	Gray	Red		
	O-Chlorobenzal-Malononitrila[6][12] (CS), (CS1),(CS-2)	G	Tear	Gray	Red		
	Adamsite (DM)[6]	G	Vomiting	Gray	Red		
	Combination CN and DM [6].[12]	G	Tear and Vomiting	Gray	Red		
	Diphenylchloroarsine (DA)[6]	G	Vomiting	Gray	Red		
	Titanium Tetrachloride (FM) [6]	G	Smoke	Lt Green	[5]		
	Sulfur Trioxide Chlorosulfonic Acid (FS)[6]	G	Smoke	Lt Green	[5]		
Full Protective Clothing- Set 3 (White)[3]	White Phosphorus (WP)[8] [9]	H	Smoke	Lt Green	[5]	Spontaneously flammable when exposed to air	1. Post fire guard until leaking phosphorus has been removed. 2. After removal of agents, post fire guard for two days for possible re-ignition.
	Plasticized White Phosphorus (PWP) [8] [9]	H	Smoke	Lt Green	[5]		
	Triethyl-Aluminum (TEA)[7][11]	L	Smoke	Lt Green	[5]		
Breathing Apparatus [4]	Signaling Smokes[4]	G	Smoke	Lt Green	[5]	Smoke, Burns at high temperature	1. Do not use water. 2. Do not look at burning material.
	Pyrotechnic Material (PT)[4][11]	G	Incendiary	Lt Red	[5]		
	Thermite (TH)[4][11]	G	Incendiary	Lt Red	[5]		
	Hexachloroethane (HC)[4] [11]	G	Smoke	Lt Green	[5]		
	Calcium Phosphide[4] [11]	L	Smoke	Lt Green	[5]		

NOTES:

1. Set 1 consists of self-contained breathing apparatus; impermeable suit or level A encapsulating suit IAW TO 14P3-1-7.
2. Set 2 consists of self-contained breathing apparatus; coveralls; protective gloves, or level B encapsulating suit.
3. Set 3 consists of flame resistant equipment self-contained breathing apparatus. (Firefighting protective clothing and equipment are to be used where compatible with conditions of material or incident.)
4. Wear Breathing Apparatus consists of a self-contained breathing apparatus. (Firefighting protective clothing and equipment may be used.)
5. Refer to TO 11A-1-53 for smoke munitions not presently marked with bands
6. Wear Set 2 protective equipment for emergency operations, when area contamination by an agent is suspected or when moving leaking items. Use to provide protection when removing a defective item from the vicinity of other explosives.
7. Wear Set 3 protective equipment when area contamination by an agent is suspected or when moving leaking items. Use to provide protection when removing a defective item from the vicinity of other explosives.
8. For emergency response forces during emergency situations, flame proof gloves, face shield and covering for the skin must be available. Leaks can be detected immediately by the smoke arising from the item. The greatest hazard is fire. Promptly immerse the item in water. Non-emergency workers will evacuate the area and notify emergency response forces.
9. WP and PWP. Water supply (such as barrels) and wash basins will be available.

10. For decontamination, the indicated protective clothing must be worn. Post the chemical hazard symbol (Figure 2.2).
11. Also post the fire direction symbol for "Apply No Water". This requirement is based on possible violent chemical reaction or danger of spreading the fire. Limited amounts of this material, such as flares in a survival kit, may be stored or maintained in a a facility protected by a fire suppression system if approved by the Fire Department.
12. Only the "Wear Breathing Apparatus" symbol need be displayed where certain riot control agents are stored in arms rooms and similar locations.

Section C--Storage and Compatibility

2.26. Basic Criteria. Set aside a segregated area to store only ammunition and explosives, related inert items, equipment and supplies.
2.26.1. Hazard Classification. Ammunition and explosives must have an assigned hazard classification for storage. This classification includes the Q-D hazard class/division and a storage compatibility group designation (TO 11A-1-47, *Explosives Hazard Classification Procedures*). TO 11A-1-46 is the source for final hazard classifications.
2.26.1.1. An interim hazard classification must be assigned for explosives items under development with no assigned hazard classification if scheduled for transportation or storage (see TO 11A-1-47). Interim hazard classified items will have the interim hazard classification letter included in storage and shipment documentation until the hazard classification is finalized. the agency obtaining the interim hazard classification must renew the interim hazard classification upon termination of the initial interim hazard classification if the item is still in the inventory or until final hazard classification is determined.
2.26.1.2. Place explosives items received without an assigned hazard classification in segregated storage (HC/D 1.1L). Contact HQ AFSC/SEWV or OO-ALC/LIW for assistance.
2.26.2. Don't store ammunition and explosives with unrelated items, except as authorized in this manual. MAJCOMs may authorize the storage of firearms in explosives storage areas to meet operational commitments.
2.26.2. (AFRC) Send requests for storage of non-munitions items in explosive storage areas to AFRC/SEW and AFRC/LGMW.
2.26.3. An ammunition item or component may have a hazard classification other than class 1 because hazard classifications are based on the predominant hazard. See paragraph 3.4.1.
2.26.3.1. When the predominant hazard *is not* an explosive reaction, class 1 will not be assigned even if the item contains a small amount of explosives. In this case the predominant hazard may be class 2 through 9 as identified in part 173, CFR 49. The inventory includes ammunition assigned to: Class 2 (compressed gas), Class 3 (flammable liquid), Class 4.1 (flammable solid), Class 5.1(oxidizer), Class 6.1 (poisonous materials), and Class 8 (corrosive materials). The hazard presented by a non-class 1 ammunition items may be severe .
2.26.3.2. For Q-D purposes, a non-class 1 item containing explosives has an NEW of zero. The item will have a compatibility group designation that governs mixed storage with class 1 items. The compatibility group to which a non-class 1 item is assigned does not apply for transportation. Siting or licensing is not required for non-class 1 items that contain explosives.
2.26.3.3. When non-class 1 components are stored or used in a facility, without other items of class 1, identify the predominant hazard to guide emergency response personnel. In this case, placards are required in accordance with NFPA/OSHA regulations. (Do not display NFPA/OSHA placards concurrently with class 1 fire symbols.)
★2.26.4. Explosives will not be taken into public assembly places except when required by essential mission needs or immediate security.

2.27. Requirements for Storage Locations. The following rules apply where explosives are stored:
2.27.1. Site explosives locations as prescribed in Chapter 4. Comply with Q-D criteria in Chapter 3 and lightning protection in Chapter 2, Section D.
2.27.2. Practice good housekeeping in all locations.
2.27.3. When required to meet Q-D criteria, construct barricades according to paragraph 3.12. Maintain barricades in good repair.
2.27.4. Provide adequate drainage for access and internal roads and all explosives locations.
2.27.5. Keep structures in good condition and suitable for the storage of munition types and hazard class/divisions involved.
2.27.6. Provide at least 24 inches of earth cover on igloos and maintain so as to prevent erosion or fire hazards.
If the igloo earth cover is less than 24", classify as an aboveground unbarricaded magazine. 2.27.7. Ensure each storage space has ventilation or other suitable means of air circulation or dehumidification. Steel arch, earth covered igloos may be built without roof ventilators (for integrity of the faraday cage lightning protection system). Front wall ventilators are permitted.
2.27.8. Where fusible links are installed, leave unpainted, and ensure they are serviceable, properly installed, and rated for a maximum temperature of 155° F to 165° F (NSN 4210- 00-033-6032 or suitable substitute).
2.27.9. Check ventilators periodically to ensure they function properly. Ventilators may be closed where blowing snow or humid air would increase condensation. They may also be closed to protect supplies from blowing sand. Set up controls to make sure heat does not build up within the storage space.

2.27.10. Don't store powered lift trucks, dunnage, empty boxes, unused pallets, excess packing material or similar items in a magazine or other space containing explosives.
2.27.11. Store noncombustible equipment required to support approved contingency plans in explosives facilities for ready use when required.
2.27.12. Don't store flammable liquids in magazines or other locations where explosives are present. Ammunition containing flammable liquids, Group J, must be stored IAW with Table 2.4.
2.27.13. Inert or live explosives or munition components may be stored together. However, training items must be physically separated from the live items they represent.

2.28. Storage Magazines.
2.28.1. Earth-covered magazines (igloo or underground) are preferred for the storage of all explosives. Units may use other types of standard magazines which are built according to approved drawings. Major commands may approve use of existing magazines of other descriptions (including contractors' facilities) if they provide the proper degree of protection and safety.
2.28.2. Any magazine or warehouse-type building that gives protection from the weather and meets Q-D and security requirements is allowed for storing explosives HC/D 1.3 and 1.4 material.
2.28.3. Indoor (magazine) storage is preferable for all types of explosives and is mandatory for bulk high explosives, solid propellants and pyrotechnics. See paragraph 3.21 for exceptions.
2.28.4. Outdoor storage is considered a temporary expedient. Use only when approved by the MAJCOM. For high density storage needed in a limited land area, use the approved barricaded module, see paragraph 3.22.
2.28.4. (AFRC) AFRC bases contact AFRC /SEW and AFRC/LGMW for approval of outdoor storage of explosives. Tenant units coordinate with the host safety office for outside storage approval.
2.28.5. Certain items which contain explosives have stringent temperature restrictions (see applicable technical order). Take precautions to ensure these limits are not exceeded.

2.29. Explosives Stocks. Store stocks of explosives in their approved, properly marked, storage or shipping configuration. Keep outer containers in good condition and securely closed. Stacks of containers must be stable and arranged in magazines or other approved locations according to storage drawings or directives. If needed, store assembled items with compatible items and components. The following rules apply:
2.29.1. Provide ventilation for all parts of the stack by use of dunnage.
2.29.2. Maintain aisles so each stack may be inspected. Block storage is allowed if stack ventilation is maintained.
2.29.3. Only the explosives needed to ensure a safe and efficient work flow will be present in an operating building when operations are being conducted. This does not preclude storage in an operating building when operations are not being conducted.

2.30. Damaged Containers and Unpackaged Items. Don't store loose explosives items, single inner packages (nonmetal) or explosives in unserviceable containers with properly packed items. Store in a magazine or space set aside for temporary storage awaiting disposition. Store nonstandard boxes of explosives with compatible and properly packed items. Keep boxes properly closed and clearly marked to show contents and quantity. Requirements of TO 11A-1-10, *General Instructions--Munitions Serviceability Procedures*, and the item TO apply.

2.31. Unserviceable Explosives Items.
2.31.1. When dangerously unserviceable items, identified as a critical defect in the item TO and TO 11A-1-10, cannot be destroyed immediately, place them in an isolated location. Separate from other storage facilities by intermagazine distance. Dangerously unserviceable items are those which have a substantially greater probability of inadvertent or unintentional activation than a normal item. Examples would be partially or fully armed fuzes, exuding dynamite, or ruptured munitions with exposed explosives. Suspended munitions (code condition J) must not be used as test assets unless specifically authorized by the item manager.
2.31.2. Segregate other unserviceable items, including lots suspended from issue and use, from serviceable items. Put them in a separate facility or segregate them physically within the same facility. Normal lot-to-lot separation is not considered to be segregated.
2.31.3. Mark each package or stack to show its exact status. The markings must be clear to prevent inadvertent issue or loss of information.
★2.31.4. Treat explosives of unknown hazard/class division as HC/D 1.1L. If local munitions and EOD experts can identify a *found on base* item sufficiently to determine that it is the same as stock listed, hazard classified items, they have the prerogative to store it accordingly. Ball cartridges, .50 cal and smaller, and all gages of shot-gun shells, may be treated as HC/D 1.4C unless 1.4S can be definitely established.

2.32. Authorized Operations in Storage Spaces Containing Explosives.
2.32.1. Palletizing, removing and replacing shipping crates (boxes or protectorks) on bombs.
2.32.2. Replacing unserviceable strapping on boxes.
2.32.3. Necessary functional testing or sampling specifically authorized by technical data for performance in a storage

location (e.g., example checking color-coded humidity indicators.) Testing engineers will coordinate proposed testing and sampling authorizations with the Nonnuclear Munitions Safety Board.

2.32.4. Opening bolted or latched special storage containers housing self-contained weapons or missiles for authorized testing, missile reprogramming, sampling or transfer to transport trailer or vehicle and installing control surfaces and argon bottles on AIM-9 series missiles.

2.32.5. Minor repair, cleaning, painting or restenciling of all-up-rounds (AUR) or containers. Solvents and paints used must not create a hazardous or explosives atmosphere within the storage space. Bio-environmental or fire department services will evaluate the potential for hazardous or explosives atmospheres.

2.32.6. Removing bomb or cluster bomb unit (CBU) fuze well plugs for inspection if they can be easily unscrewed as prescribed in the TO. Remove plugs from the storage location for cleaning. If there is a binding of the plug or evidence of exposed explosives, move bombs to an operating location before starting repairs. Clean threads and cavities with approved cleaning solvents.

2.32.7. Opening outer containers for removal of inner packages. Complete any further processing of these items in an approved operating location.

2.32.8. Opening "lite" boxes for inventory purposes. Use of pneumatic nail guns is prohibited in explosives storage locations.

2.32.9. Opening containers of hazard class division 1.4 explosives to allow inspection. Unpack, inspect and repack in the storage location if storage is limited to hazard class division 1.4 items.

2.32.10. Explosives are normally assembled in a properly sited operating building, preload facility or other designated separate facility or location. Use empty storage locations or structures for assembly and disassembly if they meet intraline criteria for operating locations (Table 3.3).

2.32.11. Install only those fuzes authorized for prefuzing by TO 11A-1-63, *Munitions Assembly Procedures, Inspection and Assembly of Non-nuclear Munitions*, in the storage facility. Before moving prefuzed bombs, inspect for safe configuration.

2.32.12. Moving large missile motors involves increased risk because of the size of the motor and electrostatic discharge (ESD) concerns. Therefore, some repairs and minor modifications may be accomplished in missile storage facilities. A risk assessment, reviewed by weapons safety, must be accomplished showing the risk to move the motor is greater than the risk to do the work.

2.32.13. Other operations as approved by AFSC/SEWV based on a risk assessment and mission requirements.

2.33. Repairing Containers. Except as allowed in paragraph 2.32, don't repair containers of explosives in magazines which contain other explosives. When maintenance and inspection facilities are not available, inspect and repair limited quantities in the open if the following distances are met: a minimum of 100 feet or intermagazine distance, whichever is greater, from aboveground magazines and the unbarricaded door end of earth-covered magazines (igloos); a minimum of 50 feet or intermagazine distance, whichever is greater, from barricaded sides of earth-covered magazines (igloos). Base distance on the quantity of explosives at the operation.

2.34. Repairing Explosives Facilities. Don't begin modifications and repairs to explosives facilities until supervisory and safety personnel decide whether the contents must be removed. Don't repair the interior of a magazine that contains bulk explosives.

2.34.1. Requirements During Repair. During facility repairs, additional safety precautions are necessary.

2.34.1.1. Keep the floor clean and free of extraneous materials and equipment in the immediate area of the repair.

2.34.1.2. Don't use flame or heat-producing equipment inside a facility that contains explosives unless the contents are protected from the flame, sparks and heat by physical separation or shielding. Notify fire department before the repair operation. Don't use equipment outside if it would expose the contents of the building to flame, sparks or other unfavorable conditions. Meet applicable requirements of AFOSH Standard 91-5, *Welding, Cutting, and Brazing***.**

2.34.1.3. Inspect the facility during and after completion of the work. Keep melting pots or other heat-producing devices at least 100 feet from the explosives location. When needed, use baffles and screens to confine sparks and flames.

★2.34.1.4. Brief personnel doing building or area maintenance on the hazards involved and precautions needed to perform the work safely, and actions to take in the event of an accident. This includes self-help projects.

2.34.1.5. If explosives remain in the facility and hazards warrant, trained explosives safety personnel must monitor repair activities for safety. The monitor will halt repair activities when, in his or her opinion, hazards are being created. The senior supervisor of the facility will resolve the problem before resuming operations.

2.35. Licensed Explosives Locations. These are ammunition and explosives storage locations normally outside the explosives storage area, but within the US Air Force area of control that support a specific explosives operation or mission. Compliance with compatibility and Q-D criteria is not required, except in compatibility groups A, K, and L. Use AF Form 2047, **Explosives Facility License**, for these locations. See Attachment 3 for completing this form. Licenses are for explosive storage only. The commander approves local written procedures as the authorization for operations involving licensed explosives.

★2.35.1. Licensed storage of mission essential quantities (as noted below) of explosives and chemical munitions items for daily operations in non-explosives operational buildings and locations is permitted. Explosive and chemical items designated for mobility must be stored within the base munitions storage area until ready for shipment. Licensing pre-positioned mobility explosives is allowed, if a properly sited area is not available, only for the duration of the mobility tasking. Licensing munitions locations used solely for exercises, such as ground burst simulators and smoke storage, is allowed only for the length of the exercise. Request a license from the installation or host safety representative.

2.35.1. (AFRC Bases Only) At AFRC bases without a designated munitions storage area (MSA), explosive items designated for mobility may be stored in a consolidated licensed location providing all provisions of paragraph 2.35 are adhered to

2.35.2. NEW limitations for licensed ammunition and explosives storage locations:

2.35.2.1 HC/D (02), (03) or (04) 1.2 up to 50 pounds NEW, or

2.35.2.2. HC/D 1.3 up to 100 pounds NEW, and

2.35.2.3. HC/D 1.4, operational limit.

2.35.2.4. Combined storage of HC/D(02), (03) or (04)1.2 and 1.3 is limited to 100 lbs NEW not to exceed 50 lbs HC/D1.2.

2.35.2.5. A fragment barrier consisting of either a 1/4 inch mild steel plate or one layer of sand bags is required when HC/D (02), (03) or (04)1.2 is stored inside or IBD is not provided to other non related facilities.

2.35.3. Separation requirements for licensed ammunition and explosives storage locations:

2.35.3.1. Separate HC/D (02), (03) or (04)1.2 by a 2 hour fire-wall or 25 feet from other HC/D 1.2 or 1.3 licensed locations.

2.35.3.2. Separate HC/D 1.3 from other locations storing HC/D1.3 by a two hour fire-wall or 25 feet.

2.35.3.3. If these separations are not maintained, the total NEW must not exceed limits in paragraph 2.35.2

2.35.4. Base weapons safety personnel validate the license request and the quantity of explosives to be kept, ensuring only the smallest quantities needed to support requirements are authorized. Licenses must clearly state the location and explosives quantities authorized. Weapons Safety coordinates with the base fire chief and security police to decide whether to approve a request. Before granting the license, the installation weapons safety and security representatives must physically inspect the facility to ensure:

2.35.4.1. The structure or room used for storage can be locked to prevent pilferage and unauthorized handling.

2.35.4.2. Fire and chemical symbols are posted in accordance with paragraph 2.25.7.1.

2.35.4.3. When necessary use dunnage to provide ventilation around explosives stocks and protect them from moisture and heat buildup.

2.35.4.4. The base fire chief has coordinated on the license and included the type and quantity of fire extinguishers, their placement at the licensed location and any additional fire prevention practices.

2.35.4.5. Ensure approved operating procedures are available for the operation supported by the licensed location.

2.35.5. Renew licenses each time a hazard class, type or quantity of explosives changes. Review each license at least annually for continued requirement and applicability. Revoke licenses when the requirement no longer exists. Ensure the user displays a copy of the license and operating procedures at each storage location.

2.35.5. (AFRC Bases Only) Annual review and/or any changes to explosive facility licenses require coordination with the fire department, munitions accountable supply officer (MASO), and the security forces. After review, annotate all licenses indicating the date annual review was accomplished.

2.35.6. The weapons safety office keeps copies of all approved licenses for the installation, maintains surveillance over licensed locations and exercises cancellation authority when conditions warrant.

2.35.6. (AFRC Bases Only) If approved, weapons safety retains the original document and sends copies to the originator, security forces, base fire department, and the MASO.

2.36. Items or Situations not Requiring a License. Paragraph 2.35 does not apply to the storage of small arms ammunition (.50 caliber or less), commercial maritime distress signals and like items held by base exchanges and individuals in family housing. (However, if the base exchange stores primers and smokeless powder, complete a license and apply the limitations of paragraph 2.37.8.) This exception also applies to locations storing less than 1000 rounds of HC/D 1.4 small arms ammunition or cartridges for cartridge actuated tools and locations storing thermal batteries. See also paragraph 2.37.2.

2.37. Safety Requirements for Specific Facilities and Explosives.

2.37.1. Control Tower. If required, store necessary quantities of hazard HC/D1.3 pyrotechnics needed to conduct emergency operations at fixed and mobile control towers. Don't load pyrotechnic projectors and pistols unless the operational situation demands a state of immediate readiness. (The same safety requirements that apply to firearms apply.) Give projectors and pistols the same security as small arms weapons. Place in a proper rack, locker, box or compartment to prevent damage, unauthorized handling, theft or accidental discharge.

2.37.2. Survival/Rescue Equipment. A license is not required for assembled parachutes, survival and rescue kits, life rafts and life preservers containing authorized explosives when kept in personnel equipment rooms or life raft, survival equipment and life support shops. A license for storage and an operating instruction are required where explosives items are to be removed and replaced.

2.37.3. Riot Control Items. If required, store riot control and smoke grenades (except white phosphorus (WP) grenades) with small arms ammunition in arms rooms and other such locations. However, if the arms room is collocated with a facility where personnel are under physical restraint or confinement, the National Fire Codes, Standard 101, Life Safety Code,

applies. Don't store 40 millimeter grenades, pyrotechnics, tear gas or chemical irritant in the room regardless of the Q-D class/division or compatibility, unless the arms room has protective features which completely protect detainees from the effects of accidental explosives activation. Protective features include fragment barriers, blast doors, and exhaust fans. Qualified engineers must evaluate capabilities of protective features. Limit the quantity to the smallest amount needed to support approved contingency plans. Provide an easily accessible protective mask and suitable gloves to remove items safely in the event of a fire or functioning.

2.37.4. Egress Systems Maintenance Shops. When necessary, units may license a limited quantity of in-use egress explosive components of any class/division (including HC/D 1.1) in the egress shop after removal from aircraft undergoing maintenance. Don't exceed the total number of complete sets for the number of aircraft in maintenance. The following special provisions apply:

2.37.4.1. Store egress explosive items in a secure space used only for explosives storage. Storage of uninstalled components must meet the NEW limitations of paragraph 2.35.

2.37.4.2. Within the egress maintenance work area, the NEW limitations in paragraph 2.35 apply to the number of seats and spare components undergoing maintenance at any one time.

2.37.4.3. Turn in unserviceable explosive items to the base munitions storage area.

2.37.5 Gun Systems and Maintenance Shops. When possible, remove ammunition from guns and gun systems before they are brought into a weapons maintenance facility for repair. Gun systems using drums don’t require removal of ammunition if the feed system is mechanically safed to prevent ammunition from feeding into gun. Q-D requirements do not apply to gun system maintenance operations when explosives are limited to HC/D 1.4 and 50 pounds of (04) 1.2 provided the using organizations ensure:

2.37.5.1. MAJCOMs will establish procedures for clearing jammed guns. Consider both active and contingency bases.

2.37.5.2. Gun systems are not brought into the maintenance facility until needed to meet the work schedule and are removed immediately after repair.

2.37.5.3. Precautions are established to prevent inadvertent firing.

2.37.5.4. Gun systems with live ammunition are grounded.

2.37.5.5. Gun system is pointed in the least hazardous direction.

2.37.5.6. Downloaded ammunition is removed from the building and returned to the base munitions storage area as soon as possible.

2.37.5.7. Compliance with general explosives safety standards.

★2.37.6. Incendiary Equipment and Document Destroyers. If necessary, store these items near the planned point of use to comply with emergency destruction plans. Establish quantities for each location by coordinating with base explosives safety representatives and your security experts. The 100-pound HC/D1.3 limit does not apply in this case. Limit quantity to the amount needed for emergency destruction plans. Training quantities are not authorized. Construct or protect storage rooms with noncombustible or fire-resistive material. If possible store in nearby small low-cost structures (sheds, conex, etc.). Ensure adequate ventilation is provided. Maintain 50-foot firebreaks or vegetation control zones and locate at least 75 feet from any other building. Store replacement stocks in the base explosives storage area. Only trained personnel are allowed to prepare and activate these devices.

2.37.7. Rod and Gun Clubs. License the explosives storage locations for clubs that handload ammunition on Air Force property. For skeet and trap ranges adhere to criteria established by the National Skeet Shooting Association. See also paragraph 2.37.8 and 2.37.9. Designate a qualified member to identify and enforce criteria.

2.37.8. Retail Stores. Where only retail sales are made, paragraph 2.35 applies. Don't complete a license unless the store sells primers and smokeless powder. More than 100 lbs of propellant and 25,000 primers, packed in their shipping containers, may be licensed if they are segregated in such a way that the maximum credible event (MCE) does not exceed 100 pounds of propellant and 25,000 primers. i.e. IM separation is met. Don't place HC/D1.3 propellant in other containers if it would result in extreme confinement in the event of ignition. Class division 1.1 primers don't require compliance with Q-D or fire symbols. Use fire symbol 3 to designate the presence of both the propellant and primers. Keep the symbol posted during temporary periods when the propellant has been sold out, but primers are still in stock.

2.37.9. Handloading. Conduct handloading operations in a room or building used solely for this purpose. Don't store or reload ammunition in dormitories or bachelor officer quarters. Use retail store safety requirements as well as the following:

2.37.9.1. Develop and post an approved local written procedure. Refer to AFI 31-209, *The Air Force Resource Protection Program,* for security.

2.37.9.2. Grant loading privileges to only authorized personnel, trained in the use of handloading equipment, safety provisions, and hazards involved. Wear safety goggles or face shields during all loading operations.

2.37.9.3. Strictly supervise members in training. Keep a log showing names of certifying instructors and each person who has satisfactorily completed the training.

2.37.9.4. Do not permit smoking, matches or flame-producing devices in any loading or storage location.

2.37.9.5. Place a ground bar with a resistance of 25 ohms or less at each entrance to the handloading room.

2.37.9.6. Post a sign requiring each person to touch the ground bar before entering the room.

2.37.9.7. Maintain and inspect the ground bar as outlined in section D.

2.37.9.8. Post explosives and personnel limits. Allow no more than 10 pounds of propellants, 10,000 primers, and 5,000 assembled rounds in the handloading room at one time. (These quantities are considered as part of the overall limits for the building.)

2.37.9.9. Provide storage lockers for propellant and transfer to the loading point only quantities required to sustain a continuous operation.

2.37.9.10. Remove only one packing tray at a time from primer storage.

2.37.9.11. Repack unused components in their original containers and return to the storage locker at the end of each loading operation.

2.37.9.12. Lock unused lockers.

2.37.9.13. Cover tables used for handloading with nonporous, nonsparking conductive material.

2.37.9.14. Permanently attach and bond handloading equipment to a 25 ohm or less grounded table top.

2.37.9.15. Test the grounding system twice a year and when broken connectors are repaired.

2.37.9.16. Document grounding system test results.

2.37.9.17. Visually inspect ground conductors before each day's operation.

2.37.9.18. Keep floors and walls free of cracks that could accumulate explosive dust and foreign materials. Observe good housekeeping practices at all times.

2.37.9.19. In case of a spill, stop all operations until the propellant is cleaned up.

2.37.9.20. Put all salvaged propellant in a metal container that contains water and is marked "Scrap Explosives."

2.37.9.21. Put all damaged components or complete rounds in separate, properly marked containers.

2.37.9.22. Separate unserviceable items from serviceable stocks.

2.37.9.23. Qualified personnel must dispose of unserviceable propellants, damaged rounds or components and empty explosives containers as directed in TOs 11A-1-42, *General Instructions for Disposal of Conventional Munitions*, and 11A-1-60, *Inspection of Reusable Munitions Containers and Scrap Material*.

2.37.9.24. Use only commercial-type loading tools, dies, scales, powder measures, and so forth for handloading operations.

2.37.9.25. Place personnel protection shields between each piece of permanently attached handloading equipment. Shields must be large enough to protect adjacent personnel. Shields can be made of plywood or Plexiglas or similar materials.

2.37.9.26. Do bullet molding outside the handloading room.

2.37.10. Morale, Welfare, and Recreation (MWR) Activities. MWR activities such as aero clubs and boating activities are sometimes required to maintain and store commercial pyrotechnic signals. Control and store these items using the same criteria as the military item which they resemble. Ensure personnel are properly trained. License the storage locations using paragraph 2.35. Technical data or manufacturer's data are sources for local written procedures.

2.37.11. Minuteman Handling Team (MHT) Facility. The transporter erector (TE) tractor or autocar with missile in tow may require temporary storage in the MHT facility. When using this procedure, comply with the following conditions:

2.37.11.1. Storage is essential to meet operating requirements.

2.37.11.2. Vehicle is chocked and grounded.

2.37.11.3. Vehicle safety inspection is performed and no safety deficiencies exist.

2.37.12. Flightline Munitions Holding Areas. Identify these areas by a physical boundary (such as rope and stanchions). Post signs to keep unauthorized personnel out of the area and to prohibit smoking within 50 feet. Post explosives and personnel limits and ensure authorizations are not exceeded. Provide fire extinguishers and post fire symbols. If providing permanent shelter for personnel, position missiles so the shelter is out of radial alignment with the warheads. Secure explosives as specified in AFI 31-209 or remove from the area when the area is not monitored. Normal Q-D outlined in Chapter 3 applies except for those licensed holding areas meeting the NEW limits of paragraph 2.35.

2.37.13. Signal Flares. HC/D 1.3 up to 100 pounds NEW can be stored in licensed locations.

2.37.14. Research and Development Laboratories for Specific Experiments. When necessary, units may license a limited quantity, not to exceed 200 grams in each licensed location, of HC/D 1.1 material for research use in laboratories. Licensing explosives used solely for a research project is allowed only for the length of the project. Commander approved local written procedures are required for the explosives operation.

2.38. Base Defense Support Munitions for Dispersed Locations. When required for defense against hostile forces, preposition base defense explosives stocks in licensed temporary magazines.

2.38.1. Waivers and deviations are not necessary when locating, storing and protecting licensed facilities and stocks as stated below:

2.38.1.1. Provide ventilation for all items stored.

2.38.1.2. If necessary, omit fire and hazard symbols if needed to avoid attention of hostile forces. Post "No Smoking" signs and keep the fire department informed of each facility's location and type of explosives.

2.38.1.3. Follow the instructions in paragraphs 2.35 and 2.37 if the facility is stocked with HC/D1.3 and 1.4 and riot control items.

2.38.2. If storing HC/D 1.1 and HC/D 1.2 items in the facility, the following conditions apply:

2.38.2.1. The maximum limit per magazine is 100 pounds NEW.

2.38.2.2. Use additional magazines for more than 100 pounds

2.38.2.3. Don't submit site plans for 100 pounds or less per magazine.

2.38.2.4. If two or more magazines are required in the same location, separate by the proper aboveground magazine distance. As an alternative, place side-by-side or back-to-back with 5 feet of earth fill or sandbags between the magazines.

2.38.2.5. If explosive items are fragment-producing, use barricades around the magazines.

2.38.2.6. Place a barricade at least 5 feet thick against each wall of any facility that violates Q-D criteria. Use sandbags or other comparable retainers. Place door end barricades as close as personnel access clearance will allow. Cover top with at least 14 inches of earth or two layers of sandbags.

2.39. Toxic Chemical Ammunition and Agents.

(Reserved for future use)

2.40. Other Toxic Substances. Store riot control, smoke, spontaneously flammable and incendiary items in any approved aboveground explosives storage facility. Underground facilities must be single-chambered sites. They must comply with storage compatibility and Q-D requirements.

2.40.1. Incendiaries and smokes are primarily a fire hazard, but inhaled fumes may cause respiratory problems. Looking at burning munitions which contain magnesium or thermite may impair vision.

2.40.2. Riot control agents may cause temporary irritation of the eyes or respiratory system. Unprotected personnel may be incapacitated until removed from the agent source. Normally, clean air will relieve the symptoms in a short period of time.

★2.41. Dividing Walls. Multicube or segregated magazines with a 12-inch reinforced concrete substantial dividing wall or equivalent protection (see glossary for details) may store up to 425 pounds of mass-detonating explosives per cell without totaling the NEW of the entire facility or requiring storage compatibility with adjacent cells. Store explosives a minimum of 3 feet from any dividing wall. If the 425 pounds NEW limit is exceeded in any one cell, compatibility must be maintained throughout the facility and the total NEW of all cells is used to compute Q-D requirements. For HC/D 1.3, if the substantial dividing wall extends through the roof and exterior walls it may be used to provide equivalent intraline protection for 5,000 pounds of HC/D 1.3 if packaged in its shipping/transportation configuration and 300 pounds of HC/D 1.3 if it is not properly packaged. If the substantial dividing wall goes up to the ceiling, but not through the roof, only IM protection is provided by the walls for 5,000 pounds properly packaged HC/D 1.3 and 300 pounds NEW unpackaged. IL separation must be used if operations are involved.

2.42. Compatibility of Ammunition and Explosive Items.

Ammunition and explosive items are assigned to compatibility groups for storage and transportation. Ideally, each type item or division should be separated, but this is generally not feasible. Therefore, a proper balance of safety and other factors may require a combination of various types of ammunition and explosives in storage and transportation.

2.42.1. If different types of ammunition and explosives, by item and division, are compatible, they may be kept together. In developing the various compatibility groups, these factors are considered:

2.42.1.1. Chemical and physical properties.

2.42.1.2. Design characteristics.

2.42.1.3. Inner and outer packaging configurations.

2.42.1.4. Q-D class/divisions.

2.42.1.5. NEW.

2.42.1.6. Rate of deterioration.

2.42.1.7. Sensitivity to initiation.

2.42.1.8. Effects of deflagration, explosion, or detonation.

2.42.2 Compatibility groups for Air Force approved ammunition and explosive items, components, and assembled weapons are given in TO 11A-1-46. Items with interim hazard classification will have the compatibility group included in the interim hazard classification letter for the item.

2.42.3 When intransit explosives shipments are stored temporarily, the criteria in Title 49, Code of Federal Regulations (CFR) , *Hazardous Materials Regulation, Transportation*, or Table 2.4 may be used. Do not store other dangerous articles with these explosives.

2.42.3.1. Transportation compatibility criteria in Title 49, CFR; or Table 2.4 may be used for shipments of DOD explosives in DOD vehicles operated by DOD personnel. Commercial shipments must comply with Title 49, CFR, *Hazardous Materials Regulation, Transportation*.

2.42.3.2. This does not prohibit developing new items in an increased state of assembly or shipping an assembled version of existing items. Shipment of assembled items on trailers or in special containers will require a safety analysis and approval by the Nonnuclear Munitions Safety Board. Hazard classification actions will be processed according to the procedures in TO 11A-1-47.

2.42.4. Compatibility Groups. Ammunition and explosives are assigned to one of twelve compatibility groups (A through H, J, K, L, and S). These groups have the following characteristics:

2.42.4.1. Group A--Initiating Explosives. These are bulk explosives with the necessary sensitivity to heat, friction, or percussion that makes them suitable as initiating elements in an explosives train. Examples: Wet lead azide, wet lead styphnate, wet mercury fulminate, wet tetracene, dry RDX, and dry PETN.

2.42.4.2. Group B--Detonators and Similar Initiating Devices. These are items which contain initiating explosives that are designed to start or continue the functioning of an explosives train. Examples: Detonators, blasting caps, small arms primers, and detonating fuzes without two or more safety features.

2.42.4.3. Group C--Bulk Propellants, Propelling Charges, and Devices Containing Propellant, With or Without Their Own Means of Ignition. These are items that will deflagrate, explode, or detonate upon initiation. Liquid propellants are not included. Examples: Single, double, and triple base and composite propellants, rocket motors (solid propellant, and ammunition with inert projectiles).

2.42.4.4. Group D--Black Powder, High Explosives (HE), Ammunition Containing HE Without Its Own Means of Initiation and Without Propelling Charge, and Fuzes With Two or More Safety Features. These are ammunition and explosive items that can be expected to explode or detonate when any given item or any of its components are initiated. Examples: Bulk TNT, Comp B, black powder, wet RDX or PETN, bombs, projectiles, and CBUs.

2.42.4.5. Group E--Ammunition Containing HE Without Its Own Means of Initiation and With Propelling Charge (Other Than One Containing a Flammable or Hypergolic Liquid). Examples: Artillery ammunition, rockets, and guided missiles.

2.42.4.6. Group F--Ammunition Containing HE With Its Own Means of Initiation and With a Propelling Charge (Other Than One Containing a Flammable or Hypergolic Liquid) or Without Propelling Charges.

NOTE: As used in groups D, E, and F, "with its own means of initiation" indicates that the ammunition has its normal initiating device assembled to it, and this device is considered to present a significant risk. However, the term does not apply when the initiating device is packaged so there is no risk of detonating the ammunition if the device functions accidentally. It also does not apply when fuzed end items are configured and packaged so that they cannot be armed.

2.42.4.6.1. Initiating devices may be assembled to the ammunition when their safety features preclude initiation or detonation of the end item if the initiating device functions accidentally. In this case, the item is considered to be "without its own means of initiation." For example, hand grenades are considered "with their own means of initiation" because the fuze has no out-of-line component. It will detonate the grenade if the fuze is initiated. Conversely, 20 millimeter (mm) high explosive incendiary (HEI) ammunition is considered to be "without its own means of initiation" because the fuze, if initiated, will not detonate the projectile because of the out-of-line rotor.

2.42.4.7. Group G--Fireworks, Illuminating, Incendiary, Smoke (Including HC), or Tear-Producing Munitions Other Than Those Munitions That Are Water-Activated, or Which Contain WP, or Flammable Liquid or Gel. These are ammunition items which upon functioning, cause an incendiary, illumination, lachrymation (tear gas), smoke, or sound effect. Examples: Flares, signals, incendiary or illuminating ammunition, smoke, or tear-producing devices.

2.42.4.8. Group H--Ammunition Containing Both Explosives and WP or Other Pyrophoric Material. These are ammunition items which contain fillers that are spontaneously flammable when exposed to the atmosphere. Examples: WP, plasticized white phosphorus (PWP), and other ammunition containing pyrophoric material.

2.42.4.9. Group J--Ammunition Containing Both Explosives and Flammable Liquids or Gels. These are ammunition items which contain flammable liquids or gels other than those which are spontaneously flammable when exposed to water or the atmosphere. Napalm-filled fire bombs, with or without explosive components, are included in this group.

2.42.4.10. Group K--Ammunition Containing Both Explosives and Toxic Chemical Agents. These are ammunition items which contain chemicals specifically designed for incapacitating effects more severe than lachrymation. See restrictions in Table 2.4. note 4.

2.42.4.11. Group L--Ammunition Not Included in Other Compatibility Groups. These are ammunition items that cannot be commingled with any other type of ammunition or explosives, or dissimilar ammunition of this same group. Examples: Water-activated devices, prepackaged hypergolic liquid-fueled rocket engines, fuel-air-explosives (FAE) devices, and pyrophorics such as TEA (triethylaluminum) or TPA (thickened triethylaluminum). This group also includes damaged or suspect ammunition or explosives of any other group. (Types presenting similar hazards may be mixed together but not with other groups.)

2.42.4.12. Group N--Articles containing only extremely insensitive detonating substances.

2.42.4.13. Group S--Ammunition Presenting No Significant Hazard. These are ammunition items packaged or designed to confine hazardous effects arising from accidental functioning within the package, unless the package has been degraded by fire. In this case, all blast or fragmentation effects are limited so they do not significantly hinder firefighting. Examples: thermal batteries, explosive switches or valves, and other ammunition items packaged to meet the criteria of the compatibility group.

2.43. Mixed Compatibility. Compatibility groups may be combined in storage and during transportation as shown in Table 2.4 and paragraph 2.64 respectively.

★2.44. Exceptions to Compatibility. Compatibility does not apply to maintenance operations requiring assembly or disassembly of incompatible components. It also does not apply during transportation of munitions to or from combat aircraft loading areas or during temporary storage in flightline munitions holding areas. Compatibility is required for all other explosives operations.

★Table 2.4. Storage Compatibility Mixing Chart.

Group	A	B	C	D	E	F	G	H	J	K	L	N	S
A	X	Z											
B	Z	X	Z	Z	Z	Z	Z					X	X
C		Z	X	X	X	Z	Z					X	X
D		Z	X	X	X	Z	Z					X	X
E		Z	X	X	X	Z	Z					X	X
F		Z	Z	Z	Z	X	Z					Z	X
G		Z	Z	Z	Z	Z	X					Z	X
H								X					X
J									X				X
K (4)													
L													
N		X	X	X	X	Z	Z					X	X
S		X	X	X	X	X	X	X	X			X	X

NOTES:

1. "X" at an intersection means that those groups may be combined. Otherwise, mixing is prohibited or restricted.

2. "Z" at an intersection means that limited quantities of mission essential items may be mixed. This mixing is approved only when operational considerations or lack of magazine space warrant it, and when safety is not sacrificed. However, these items must be kept packaged according to DOT shipping container specifications of Special Packaging Instructions, or equivalent. Also, these containers may not be opened in the magazine for any reason, including actions specified under paragraph 2.32. Examples of acceptable combinations of class 1 are:

a. Division 1, group A, initiating explosives with division 1, group B, fuzes not containing two or more independent safety features.

b. Ammunition items without explosives which contain substances belonging to another hazard class may be assigned to the same compatibility group of items containing explosives and the same substance. Both items may be stored together.

3. Equal numbers of separately packaged components of complete rounds of any single type of ammunition (for example, missiles, GP bombs) may be stored together. They may also be stored with assembled rounds made up from these components. When so stored, the compatibility will be that of the assembled round. That is, group H for WP rounds; group D, E, or F, as appropriate, for HE rounds. (The "equal number" provision is intended to limit the material stored to enough packaged components to make up the desired number of complete rounds. It is not necessary to unpack extra components from normal packaging to make an "equal numbers" condition

4. Group K items cannot be mixed with other groups. Also, some group K items cannot be mixed with different items within the same group K. HQ AFSC/ SE will determine which items under group K may be mixed with other items and which must be kept separate when such a requirement develops.

5. Ammunition designated "Practice" or "Target Practice" by National Stock Number and nomenclature may be combined with the fully loaded ammunition that it simulates (for example, 2.75-inch target practice (TP) rockets with WP rockets).

6. Small quantities (not to exceed 1,000 pounds total NEW) of compatibility groups B through J, N and S may be stored together. The NEW of 1.4S items need not be included.

7. For purpose of mixing, all items must be packaged in approved storage containers. Items will not be unpacked at storage locations except as authorized in paragraph 2.32.

8. Articles of compatibility groups B and F will each be segregated in storage from articles of other compatibility groups by a dividing wall even when applying note 6.

Section D--Electrical Hazards

★2.45. General Information. The installation and use of electrical equipment within explosives buildings, magazines, operating locations, shelters, etc. will comply with, as a minimum, the National Fire Protection Association, Standard 70 (NFPA 70) and AFI 32-1065. NFPA 70 is also known as the National Electric Code (NEC). In planning installation of electrical equipment in hazardous locations, it is often possible to reduce the quantity of special equipment needed by placing the equipment in less hazardous areas.

2.46. Hazardous Locations. The presence of explosives does not necessarily make an area a "hazardous location" with respect to electrical equipment or wiring. To qualify as a "hazardous location," conditions listed in 2.46.1 through 2.46.3 below should either exist or be probable under operational or accidental situations. Some specific definitive drawings for explosives facilities require the installation of certain basic electrical equipment meeting parts of the code. Hazardous locations are divided into three classes. Each class is broken down into two divisions: Division 1 (the more hazardous) and Division 2. For additional information, see the NEC.

2.46.1. Class I. A location where enough flammable gases or vapors exist, or may be present in the air to produce explosive or ignitable mixtures. A room or building that contains vapors from explosives will be considered a Class I hazardous location.

2.46.2. Class II. A location which is hazardous because of the presence of combustible dust. For example, a room or building that contains explosive dust whose size or chemical composition is such that particles may disperse to create an explosive atmosphere.

2.46.3. Class III. A location which is hazardous because of the presence of easily ignitable fibers which are not likely to be suspended in air in large enough quantities to produce an ignitable mixture.

2.47. Approved Equipment. Electrical equipment listed by the Underwriters' Laboratories (UL) or other recognized testing agency is acceptable only when used under the recommended environmental and operational conditions. Equipment will be approved not only for the class of location, but also for the explosion properties of the specific gas, vapor, or dust that will be present. For additional details see the NEC.

2.47.1. Special Requirements:

2.47.1.1. Electrical equipment and installations in Class I, II, or III hazardous locations involving explosives will comply with the requirements of the code for Division 1 of the appropriate hazardous location class. Equipment and installations in locations which could be used as either a Class I or II hazardous location will meet the requirements of both classes.

2.47.1.2. An alternate source of power must be available for explosives operations where the lack of a continuous power supply may cause a fire or explosion.

2.47.1.3. Low power, solid state devices which are "intrinsically safe" under the NFPA, Standard 493, may be used in any hazardous location.

2.47.1.4. Maintenance. Extraordinary care will be taken in the maintenance of equipment and electrical installations in hazardous locations. The equipment must be periodically inspected and maintained by qualified personnel, with a written record kept of the inspections and maintenance. Where inspection frequency is not prescribed in a technical order (TO), technical manual (TM), or other directive, the inspection period will be fixed by local authority on the basis of the existing situation.

2.47.1.5. Photographic Lighting. Magnesium flashlights or photoflash bulbs are not allowed in hazardous locations. Only lighting equipment bearing the UL listed label for the hazard involved will be used for photography.

2.47.2. Repairs of Electrical Equipment. Repairs and changes will be made only by qualified persons authorized to do such work. Where the equipment may have been exposed to contamination from explosives, the explosives will be removed or neutralized before repairs are started.

2.48. Electrical Lines. The following standards apply to each explosives location within an explosives storage area and to flightline munitions holding areas. They do not apply to licensed explosives locations on the base (such as survival equipment rooms, egress systems maintenance shops, or armories).

2.48.1. Existing lines of all types carrying 15,000 volts or less must be separated by at least 50 feet from the nearest conductive point of any explosives operating or storage location. The separation distance for combustible explosives facilities and open PES's will be greater than the distance between the poles which support the lines. Items such as metal window frames, lightning terminals and their exposed and down connectors, metal doors, ventilators, and ground systems are examples of conductive points.

2.48.2. For aboveground electrical distribution lines carrying less than 69 kilovolts (kv), the towers or poles supporting these lines and unmanned electrical substations will be no closer to explosives exposures than incremental PTR distance.

2.48.3. For aboveground electrical transmission lines carrying 69 kv or more, the towers or poles supporting these lines and power houses which are part of a grid system serving a large off-base area will be located no closer to explosives exposures

than incremental inhabited building distance. Incremental PTR may be used if loss of the line will not create serious social or economic hardships

2.48.4. Electrical transmission lines which can be interrupted without loss of power (i.e. power is rerouted through other existing lines or networks) will be farther from the explosive site than the length of the lines between the poles or towers supporting the lines but no closer than 50'.

2.48.5. Electrical Service Lines to Explosives Locations (Except Licensed Explosives Locations). Each service line, including shielded

cabling, power cabling, communication lines, and conduit, must be run underground from a point at least 50 feet away from the building. The line side of the main disconnecting switch or circuit breaker must have suitable lightning arrestors, usually at the point of the overhead to underground riser service connections.

2.48.6. When the service entrance conductor terminates in a normally open switch or a single transformer (in, on, or near the building), there must be a second set of properly grounded lightning arrestors nearby.

2.48.7. Electrical motors installed in a room or building which is a Class I or II hazardous location will be designed and certified to meet the appropriate hazard class and group. NEC, Article 500 contains the design requirement.

2.48.8. Portable Lighting Systems. UL-listed floodlight systems, mounted on heavy portable stands and placed outside the magazine door or the outdoor working area, may be used where required. Service cords must be placed or protected so that they cannot be walked on or run over by equipment. See paragraph 2.21.7.

2.49. Permanent Lighting for Storage Magazines. If permanent lighting is essential, use an approved type of disconnect switch placed outside the magazine. The power will be on only when personnel are working in the magazine. Internal fixtures will be standard UL-approved or equal. Explosive proof lighting is required only for the hazardous locations as listed in paragraph 2.46. See NFPA 70, Article 400 for additional information.

2.49.1. Portable Generators. See paragraph 2.21.7 for positioning and use of portable support equipment. Place or protect each electrical cord so that it cannot be walked on or run over by equipment.

2.49.2. Flexible Cords. Flexible cords should be type SO hard service cord. Splices are not allowed. All flexible cords, receptacles, and attachment plugs must be equipped with three prongs so that the third prong (green wire) acts as ground. Flexible cords will not be used in place of fixed or installed electrical wiring. Damaged flexible cords will be immediately removed from service.

2.50. Flashlights and Lanterns. Flashlights and hand lanterns powered by low voltage dry cell batteries and "miners' cap lamps," approved as "Permissible" by the US Bureau of Mines and by UL for Class I hazardous locations, are considered satisfactory for both Class I and II hazardous locations. In Class III hazardous locations and non-hazardous explosives locations, any type dry cell flashlight is acceptable. Devices which provide "cold light" through chemical action are acceptable for use in any hazardous location.

2.51. Static Electricity and Grounding. Static electricity is a hazard created when charges are allowed to accumulate to the point where an uncontrolled discharge occurs through, or in the presence of, a hazardous substance susceptible to initiation.

2.51.1. Personnel who work in a hazardous location or who handle or install unpackaged electrically initiated explosive devices and ammunition must avoid using rags and wearing clothing made of materials which have high-static generating characteristics. Normally, clothing materials acceptable for flightline use are acceptable for handling munitions (TA 016). Cotton or cotton-synthetic blend materials are preferred. Materials of 100 percent polyester, nylon, rayon, silk, or wool are highly static-producing. Wool socks, glove inserts, and caps as well as undergarments of synthetic fabrics are less of a hazard. Nylon garments should not be worn as an outer garment. Gortex garments may be worn during explosive operations if there are no exposed explosives.

2.51.2. Personnel, regardless of the type of clothing worn, can collect a charge of static electricity by being in contact with moving non-conductive substances, or coming in contact with a mass that has been previously charged. Therefore, personnel must be careful to discharge their static electrical potential or equalize it to that of the explosive item before it is handled. Particularly avoid directly touching an electrical primer.

2.52. Static Grounding.

2.52.1. Grounding Equipment. The method generally used to eliminate or reduce the hazard from static electricity is to provide an electrically continuous path to ground.

2.52.1.1. When all of the objects are conductive, they can be grounded by electrically connecting all parts to a common ground conductor.

2.52.1.2. When deemed necessary, effective grounding must include the exterior of the facility and the contents of a container. Partial grounding, or using conductors that are too weak or have too much resistance, may increase the static hazard by providing opportunities for discharge through an uncontrolled path to ground.

2.52.1.3. Electrical continuity may be broken by oil on bearings, paint, or rust at any contact point. To get a continuous circuit, grounding straps should be used to bridge such locations. Equipment in contact with conductive floors or table tops is not adequately grounded.

★2.52.1.4 Static grounds will not be made to telephone grounds; electrical conduit systems; gas, steam, hot water, or air lines; sprinkler systems; or air terminals of lightning protection systems (connection to the "down wire" of the system at the ground level is authorized). Wire used as a permanent static ground conductor should be large enough to withstand mechanical damage and must not be less than American Wire Gauge (AWG) No. 6 (or No. 8 for existing bonds), or a braided cable of equal resistance. Wires used as static grounds for portable or movable equipment will be large enough to carry the expected current load as specified in the item technical data, but will not be smaller than AWG No. 12 (3/32-inch cable).

2.52.2. Belting. If static electricity is a hazard, use non-static-producing belting which has a resistance to ground not exceeding 600,000 ohms. This will include belt-driven compressors, conveyor belts, and so forth.

2.52.3. Conductive Floors and Conductive Shoes. Use standard conductive floors and shoes to provide proper static grounding for personnel at operations where exposed explosives are present. (See para 4.18.2.)

2.52.3.1. Dust-air mixtures of ammonium picrate, tetryl, tetrytol, and dust of solid propellants are also sensitive to static electricity discharge.

2.52.3.2. When conductive floors and shoes are required, table tops on which exposed explosives or dusts are encountered should be covered with a properly grounded conductive material meeting the same requirements as those required throughout an entire building or room. In small areas, conductive mats or runners may be substituted.

2.52.3.3. Personnel, except electricians performing system checks, in places where conductive floors or coverings are required and installed will wear conductive footwear.

2.52.3.4. Where conductive floors and shoes are required, the resistance between the ground and the wearer will not exceed 1,000,000 ohms; that is, the total resistance of conductive shoes on a person, plus the resistance of floor to ground.

2.52.3.5. Conductive shoes and floors need care to ensure retention of their conductive properties. When the shoes are not in use, they should be stored in lockers close to the room where they will be worn, and the change from non-conductive to conductive shoes should be made at that location. Take precautions to prevent the accumulation of even a thin layer of dust or wax which can insulate conductive shoes from the floor. Supervisors will ensure that conductive shoes are not altered so as to negate their safety features and that only conductive material is used in their repair. Shoes must also be cleaned thoroughly before being repaired.

2.52.3.6. Tests of floors will be made initially and at least semiannually to ensure that they meet resistance requirements. Test conductive sole shoes before each shift

2.52.3.7. Test instruments will not be used until all exposed explosives that are subject to possible ignition or initiation have been removed from the hazardous area.

2.53. Installed Systems and Equipment Grounds. Attention must be given to the installation and maintenance of electrical grounding where explosives are involved. All grounding mediums should be bonded together. If the structure is equipped with a lightning protection system, all grounds, including static grounds, must be interconnected as outlined in AFI 32-1065 "*Grounding Systems*." Grounding will be tested when installed to ensure that design specifications are met and at intervals thereafter as prescribed in AFI 32-1065. Before making any electrical continuity and resistance tests or electrical repairs, remove all exposed explosives or EEDs that are subject to initiation under the specific circumstances. If there is an operating generator or energized transformer at the location, connect a shunt grounding strap before opening an installed grounding connection for repair or replacement. If the TO or TM does not state the grounding requirements, testing requirements, or the frequency of inspection and testing, use the following guidance:

2.53.1. In a hazardous location (as defined in paragraph 2.46):

2.53.1.1. Where the installation permits viewing, make a visual inspection of all static bonds for breaks and corroded connections before starting operations on each day the equipment is to be used. Test any suspected connections and bring them up to required standards before starting operations.

2.53.1.2. Test the static bonding straps on equipment for electrical continuity and resistance every 3 months. Resistance to ground of 10,000 ohms is adequate to bleed off the static charges. Because the static grounding system must be connected to the facility grounding system, resistances of 25 ohms are common.

2.53.1.3. Consider equipment (except a belt-driven machine) as a unit in testing of resistance to ground. In measuring the total resistance to ground for belt-driven machinery, do not count the resistance of the belting.

2.53.1.4. Ground all conductive parts of equipment through a resistance of 25 ohms or less, unless 10 ohms is required for lightning protection, or unless the system attaches to a lightning protection installation with a ground loop conductor (previously referred to as a counterpoise). See paragraph 2.53.3. Continuity across bonds must be less than 1 ohm.

2.53.2. In a non-hazardous explosives location:

2.53.2.1. Static bonding straps must be inspected visually for breaks and corroded connections quarterly. Suspect connections will be tested for continuity, brought up to required standards, and re-tested before starting operations.

2.53.2.2. Static bonds for equipment will be tested for electrical continuity and resistance every 24 months. Resistance to ground of 10,000 ohms is adequate to bleed off the static charges. Because the static grounding system must be connected to

the facility grounding system, resistances of 25 ohms are common.

2.53.3. There is no requirement to perform an earth (ohms) resistance test of the counterpoised system. However, continuity of the static grounding system must be assured according to AFI 32-1065.

2.53.4. Grounding During Electrically Primed Ammunition Operations: Electrically initiated munitions and explosive devices will be grounded when:

2.53.4.1. The responsible engineering function has determined grounding is necessary for specific maintenance or electrical test operations.

2.53.4.2. Performing maintenance on any explosive components which incorporate an electrical initiating system.

2.53.4.3. Assembling to, or disassembling from, an all-up-round (AUR) configuration for a munition which incorporates an electrical initiating system, and when electrical connection or disconnection is being accomplished.

2.53.4.4. The operations which require grounding listed in 2.53.4.1 to 2.53.4.3 above are normally included in the specific item technical order.

2.53.5. Electrically initiated munitions and explosive devices need not be grounded when:

2.53.5.1. Cleaning, painting, re-stenciling, or preserving AURs, or replacing components of those AURs which do not incorporate an electrical initiating system.

2.53.5.2. Cleaning, painting, re-stenciling, or preserving explosive components which do not incorporate electrical initiating systems.

2.53.5.3. Replacing components of AURs which incorporate an electrical initiating system when the replacement operation does not require electrical connection or disconnection.

2.53.6. When any electro-explosive device (EED) is unpackaged and handled, personnel must comply with the following procedures.

2.53.6.1. Post signs at entrances and in the room reminding personnel that periodic grounding is required.

2.53.6.2. Where feasible, personnel should wear conductive sole shoes and stand on conductive floors or conductive mats.

2.53.6.3. Conductive materials may be installed on work table surfaces which are then connected to building ground systems to provide a continual ground.

2.53.6.4. If the above is not feasible, one or more grounding bars or other suitable grounding device should be installed at the entrance of, or in, the work bay, room, or building. Require each person to touch that grounding device before handling the ammunition and at frequent intervals while working to discharge any spark potential.

2.53.6.5. Combat aircraft will be grounded when ammunition is being loaded (unless exempt under paragraph 2.57). Personnel handling the ammunition will touch the airframe before beginning operations and at frequent intervals thereafter to discharge any spark potential. Ensure the aircraft being loaded is not within the hazard zone of operating radar.

2.53.6.6. When wearing protective clothing, the same grounding requirements apply. Even though the conductivity of the clothing is low, the probability of discharge during handling of explosive components is reduced by grounding.

2.53.7. Personnel must not move ammunition rapidly across any non-conductive surface.

2.53.8. Personnel should test any grounds associated with these operations as specified in AFI 32-1065.

★2.54. Lightning Protection. Properly maintained lightning protection is required (with exceptions) for ammunition and explosives facilities. If lightning protection systems (LPS) other than the types prescribed in the following subparagraphs are used, they must offer equivalent protection. Install LPS on facilities, including open pads, revetments, and modules used for manufacturing, processing, handling, or storing explosives, ammunition, explosive ingredients, flammable gases or liquids, and other hazardous materials except as specifically exempted by this regulation. Lightning protection systems must comply with National Fire Protection Association (NFPA) 780, *Lightning Protection Code*, the National Electric Code, NFPA 70, reference (l), and MIL-HDBK-419. All locations where explosives are involved should be equipped with an LPS, and the systems maintained regularly.

2.54.1. Lightning protection systems. Lightning protection systems must feature air terminals, low impedance paths to ground, sideflash protection, surge suppression of all conductive penetrations into the protected area, and earth electrode systems. Structural elements of the building may serve as air terminals, down conductors, or the earth electrode. Lightning protection systems used to protect DoD ammunition must be designed to intercept lightning at a 100 ft or less striking distance arc in accordance with NFPA 780, Appendix K.

2.54.1.1. Air terminals. An air terminal is a component of a lightning protection system that is able to safely intercept lightning strikes. Air terminals may include overhead wires or grids, vertical spikes, or a building's grounded structural elements. Air terminals must be capable of safely conducting a lighting strike.

2.54.1.2. Down conductors. Down conductors (flat or round) provide low impedance paths from the air terminals described above to the earth electrode (ground) system. Structural elements having a high current capacity and a low impedance to ground need not be augmented with wires. Where wires are used as down conductors, these shall meet the requirements of the NFPA 780, Appendix K.

2.54.1.3. Sideflash protection. Protection from side flash caused by lightning shall be obtained by either separation distance or bonding in accordance with NFPA 780, Appendix K, except as modified by subsequent subparagraphs. The reinforcing bars in adjacent structural elements must be joined in a manner to provide electrical bonding-a between the elements. This is an absolute requirement for facilities that are used to store ammunition. Techniques commonly used and approved in the construction industry to join reinforcing steel are acceptable for this purpose. The steel arch of an earth-covered magazine must be similarly bonded to the floor.

2.54.1.4. Surge protection for incoming conductors. A lightning protection shall include protection for all incoming conductors. The surge protection must include suppression at the entrance to the building from each wire to ground. Shielded cable, power cabling, communication lines, and electrical conduit shall be buried underground in conduit for a minimum of 50 feet prior to entering the structure. All other metallic utility lines and pipes must be electrically connected to the lightning protection system or the structural steel of the building just before they enter the building.

2.54.1.5. Earth electrode system. Earth electrode systems dissipate the current from a lightning strike to ground. Earth electrode systems may be Ufer grounds, ground loop conductors, radials, grounding rods, ground plates, a cable immersed in nearby salt-water, chemical grounds that are installed for the purpose of providing electrical contact with the earth, or combinations of these.

2.54.1.6. Visual inspection. The lightning protection system shall be periodically inspected at a frequency determined by each service. Visual inspections shall be conducted at least yearly

2.54.1.7. Electrical tests. The lightning protection systems shall be periodically tested electrically as specified AFI 32-1065. Electrical testing shall be accomplished at least every two years.

2.54.1.8. Bonding (resistance) tests. Bonding (resistance) tests shall be conducted periodically (or after facility modification that may affect bonding). A maximum resistance value of one ohm is permitted across all bonds.

2.54.1.9. Resistance to earth tests. Resistance to earth tests of the lightning protection system shall be conducted periodically during the same season of the year (or after facility modification that may have affected the system).

2.54.1.10. Records. Records of resistance to earth tests shall be kept on file for the last six inspection cycles. These records shall be reviewed for trend analysis

2.54.1 11. Training. Personnel responsible for maintenance, inspection and testing must be familiar with the fundamentals described in NFPA 780, Appendix K, and herein as they relate to explosives facilities to ensure requirements of subparagraphs above, are met.

2.54.1.12. Lightning protection exceptions. Properly maintained lightning protection is required for ammunition and explosives facilities, with the follow exceptions.

2.54.1.12.1. Explosives operation served by a local lightning warning system to permit operations to be terminated before the incidence of an electrical storm if all personnel can and will be provided protection equivalent to public traffic route distance.

2.54.1.12.2. Facilities containing only ammunition or explosives that cannot be initiated by lightning, as determined by the DoD Components concerned and approved by DDESB, where no fire hazard exists and the damage from a lightning strike is acceptable to the military service.

2.54.1.12.3. Facilities where personnel are not expected to sustain injury and, at the same time, the resulting economic loss of the structure, its contents or surrounding facilities is minimal

2.54.2. Protection is desirable but not mandatory under the following circumstances:

2.54.2.1. Igloos that have all metallic structural components, including ventilators, metallic doors, and reinforcing steel, electrically bonded together (that is, made electrically continuous) and grounded.

2.54.2.2. Facilities used for temporary (non-recurring) storage of munitions.

2.54.2.3. Structures, facilities, or mobile equipment housing explosives or explosives operations not regularly situated at a fixed location.

2.54.2.4. Structures and facilities limited to the storage or handling of small arms ammunition where the value of the ammunition is $10,000 or less.

2.54.2.5. Air terminal systems (lightning rods) are not required on HASs or on metal aircraft shelters when any portion of the shelter or its appurtenances does not exceed 50 feet in height.

2.54.2.6. Licensed explosives locations outside the explosives storage area but situated in buildings primarily used for other purposes and that have relatively small quantities of explosives. ***NOTE:*** This exemption from additional or special lightning protection is made because of the explosives. Other contents of the building may require protection.

2.54.2.7. The responsible commander accepts the loss of resources at the location without LPS and any collateral damage expected at nearby exposures. A lightning detection system must be in place and an approved operating instruction (OI) governing withdrawal of personnel from the area is required.

★2.54.3. Lightning protection systems may be omitted on flightline PES's if the system interfers with flightline criteria.

2.54.4. Air terminals may be omitted on earth-covered igloos constructed according to approved definitive drawings, unless the structures qualify as a "hazardous location" (paragraph 2.46). When air terminals are removed, the following apply:

2.54.4.1. Ammunition and explosives must be in closed containers or in their approved shipping configuration.

2.54.4.2. The steel arch and/or reinforcing bars must be electrically connected with conductor cables to the ground terminal system.

2.54.4.3. Ventilator metal must be at least 3/16 inch thick and electrically connected to the ground terminal system, or magazine contents must be protected from molten metal fragments of the ventilator when hit by lightning.

2.54.4.4. Bonding, surge suppression, and grounding must meet requirements of AFI 32-1065.

2.54.5. Testing and Inspection of Lightning Protection Systems. AFI 32-1065 contains guidance for testing and inspecting electrical bonding and grounding systems. Facility managers must coordinate with the base civil engineering function to ensure explosives storage and operating locations and facilities are properly maintained.

2.55. Electrical Testing of Explosives Items, Components, and Weapon Systems. Follow instructions in specific weapon or weapons system technical orders for testing individual explosive items or weapon systems. Where there is doubt about the safety or adequacy of any test procedure or instrumentation, submit a request to the responsible technical agency (prime AFMC element) for advice or assistance. Consider the following guidance.

2.55.1. Electrical or electronic test equipment should normally use the weakest possible power source. If feasible, use battery-powered equipment instead of a 110-volt source. In any event, the test power source should be incapable of initiating the explosive item being tested. Where greater power must be used, provide positive safeguards to prevent delivery of enough power to initiate the item.

2.55.2. Test equipment should not be placed in hazardous locations unless necessary, and then it must be suitable for operations in a hazardous location. (paragraph 2.46)

2.55.2.1. Special attention should be given to the ventilation requirements of equipment containing vacuum tubes and the possibility of malfunction of equipment using resistors and other devices for limiting testing power.

2.55.2.2. Unless the test equipment is incapable of initiating the item being tested, operational shields should be provided where needed to protect personnel from injury. Test equipment should be suitable for operation in a hazardous location.

2.55.2.3. The explosive item, test equipment, and leads should be protected from exposure to electromagnetic (induction and radiation fields) and electrostatic energy of more than an order of magnitude less than that required to initiate an explosion.

★2.56. Procedures in Event of Electrical Storms.

2.56.1. The following guidelines apply when an electrical storm is in the vicinity. An electrical storm is considered “in the vicinity” if personal observation or official weather reports locate lightning flashes within 5 nautical miles (5.75 miles) of the installation. When an electrical storm is in the vicinity, personnel can no longer remain inside the PTR Q-D arc emanating from an unprotected explosives loaded truck holding pad, an unprotected open explosives storage pad, or an unprotected PES that is a facility. These types of locations (facilities or areas) are considered unprotected if they have no lightning protection installed.

2.56.1.1. All explosives operations will stop that are outdoors or at an indoor location that has no LPS protection. The continuation of explosives operations within an LPS protected facility is not prohibited. When continuing operations in LPS equipped facilities, assess the need and urgency for doing so. There are no guarantees that LPS protection will provide the same degree of safety as a lightning-free environment.

2.56.1.2. Whenever possible, ask the local weather unit to make an accurate assessment and to arrange for weather warnings when existing or scheduled operations might create an exceptional hazard.

2.56.1.3. Responsible persons should be empowered to order evacuation when considered necessary. Personnel will be evacuated from these locations:

2.56.1.3.1. Explosives locations (other than those licensed under paragraph 2.35), operating buildings, open storage sites or loading docks without approved lightning protection systems, which contain explosives.

2.56.1.3.2. Facilities containing exposed explosives, explosive dust or explosive vapor, or unpackaged electrically initiated explosive devices, even though equipped with approved lightning protection systems.

2.56.1.3..3. Parked, explosives-laden vehicles and railroad cars, not protected by an approved lightning protection system.

2.56.1.3.4. All locations within public traffic route (PTR) of facilities and carriers listed above.

2.56.2. Aircraft explosives loading, unloading, or pre-load operations will be stopped at the same time that fueling and defueling operations are suspended (AFOSH Standard 127-100). Also, see para 2.56.1.1. above. This manual does not require the full evacuation of all flightline personnel, under these conditions. The operations and logistics group commanders and weather officer will develop and set up warning procedures so that timely precautionary measures may be taken.

2.57. Grounding Aircraft for Explosives Loading and Unloading Operations. Aircraft will be grounded during explosives operations. See TO 00-25-172 for grounding procedures. **EXCEPTIONS:**

2.57.1. If there are unusual parking problems in operating from "bare" and "limited" bases, nonmilitary airfields, host nation airfields, etc., the exceptions in paragraph 2.57.2.2 apply. This exception does not relieve commands from responsibility of providing proper grounding in locations where operations continue or where parking facilities are required on a recurring basis.

2.57.2. If static grounding facilities are not available at a suitable parking location, commands should use the best alternate method of reducing the hazard in the following order of precedence:

2.57.2.1. Commands should accomplish static grounding to 10,000 ohms (or the lowest resistance possible) by using ground rods.

2.57.2.2. If feasible, the aircraft and the vehicle or handling equipment used in loading and unloading will be connected (bonded) together with an approved static ground capable of equalizing the static charge between the two. For example, although it is considered feasible to bond a cargo vehicle to the aircraft, it may not be feasible to bond an aircraft to a forklift if the lift must move during the loading operation.

2.57.2.3. Personnel will be particularly careful to discharge themselves or to equalize their static electrical potential to that of the aircraft, vehicle, handling equipment, etc., while loading and unloading explosives.

2.57.2.4. Cargo aircraft do not require grounding during engine running on/off (ERO) operations.

2.58. Hazards of Electromagnetic Radiation to Electro-explosive Devices (EED).

2.58.1. General Information. Use the criteria in this paragraph unless a specific and valid exception has been authorized for a given hazard.

2.58.1.1. If an electromagnetic hazard to EEDs cannot be solved by technically qualified personnel at the local level, obtain consultation and measurement survey assistance as shown in 2.58.10 below.

2.58.1.2. If an exception to the guidance given in this manual has been authorized, take the following action as appropriate:

2.58.1.2.1. When the findings apply to a given weapon system, equipment, or explosive item, the applicable weapons system or other TO must be changed to include the criteria. The agency requesting assistance will notify the command and activity responsible for the TO of the required changes, with information copies to all concerned parties.

2.58.1.2.2. When circumstances make it appropriate, details of the situation and the authority and basis of the approved criteria will appear in permanent base or unit publications.

2.58.2. Electromagnetic Radiation Hazards**:**

2.58.2.1. EEDs are initiated electrically. One aspect of possible hazards is the accidental firing of EEDs by stray electromagnetic energy. A large number of these devices are initiated by low levels of electrical energy and are susceptible to unintentional ignition by many forms of direct or induced stray electrical energy, such as from lightning discharges, static electricity, or turbo-electric (friction-generated) effects, the operation of electrical and electronic subsystems onboard weapon systems, and radio frequency (R-F) energy due to ground and airborne emitters (transmitters).

2.58.2.2. Hazards from lightning discharges applicable to ground operations are covered elsewhere in this chapter. Lightning protective systems and requirements normally preclude inadvertently initiating EEDs by direct lightning strikes. Mishaps have occurred where EEDs have been initiated by induced currents from nearby and even distant lightning strikes.

2.58.2.3. Hazards from static electricity to EEDs in explosive items occur mainly in ground operations. Some airborne incidents attributed to static electricity probably were due to induced effects from lightning strikes or to stray energy from onboard equipment.

2.58.3. Stray energy, such as transients and other forms of induced energy, can be imposed on circuits affecting EEDs from other subsystems by various methods. Examples are inductive or capacitive coupling from other cabling; sneak ground circuits; defective components or wiring; errors in design, modification, or maintenance.

2.58.4. EEDs may be initiated by exposure to radiated fields of R-F emitters. The degree of susceptibility depends on many variables. These variables are the threshold firing level of the EED; the ability of the leads, circuit, or installation to capture R-F energy; the type and characteristics of R-F energy, and methods of coupling which can introduce this energy into the EED.

2.58.5. Safe Separation Distance Criteria. Table 2.5 should be used as a guide in setting up safe separation distances between EEDs and the transmitting antenna of all R-F emitters. (More accurate distance calculations can be made using the procedures in 2.58.6.1 below.) These criteria apply generally to critical areas involving explosives assembly, disassembly, testing, loading, and unloading operations. The distances are based on a "worst case" situation; that is, most sensitive EEDs presently in the inventory, unshielded, having leads or circuitry which could inadvertently be formed into a resonant dipole, loop, or other antenna. Where EEDs are in less hazardous configurations, use the procedures outlined in paragraphs 2.58.6.2 and 2.58.6.3 below.

2.58.6. Shorter Distance Considerations. Less separation distance may be allowed when EEDs are not in an exposed condition. Before the separation distance is reduced, there must be an analysis of local conditions, type of operations, and the inherent R-F protection afforded EEDs in a given situation. Use the formulas in Table 2.5 for calculating safe separation distances from EEDs in specific configurations. Other possible configurations are:

2.58.6.1. For unknown "worst case" situations or exposed EEDs, use Table 2.5, column B.

2.58.6.2. EEDs stored or transported in metal containers with their leads twisted (shorted) together. Such items normally would be safe in almost any military electromagnetic environment; however, due to discontinuities, thickness of metal, or non-conducting gaskets, the inherent shielding effectiveness of the container may be degraded. Use Table 2.5, column C, to calculate recommended safe separations and maximum safe power densities.

2.58.6.3. EEDs stored or transported in nonmetallic containers with their leads twisted (shorted). Use Table 2.5, column D, to calculate recommended safe separations and maximum safe power densities.

2.58.6.4. Aircraft parked, taxiing, or in flight with externally loaded weapons. Use Table 2.5, column E, to calculate recommended safe separations and maximum safe power densities.

2.58.6.5. Shipments of EEDs and EED subsystems in the transport packaged configuration, inside cargo aircraft. Use Table 2.5, column E, to calculate recommended separations and power densities.

2.58.6.6. Leedless EEDs. For EEDs which do not have lead wires and are in the original shipping configurations and containers, the recommended separation is shown in Table 2.5, column F.

2.58.6.6.1. When handling and installing EEDs, apply the distance listed in Figure 2.3 or Table 2.5, column B, even though leedless EEDs are involved, since weapon systems wiring could form a resonant antenna during installation. 2.58.6.6.2 Every person who handles these devices must be careful not to touch any electrical contact to the metal surfaces of aircraft and missile skin and/or structure, and must take precautions against building up or discharging static electricity through such contacts.

2.58.7. Precautionary Procedures. Leave EEDs in their containers until ready for use. Be careful when untwisting leads not to form a resonant dipole, loop, or other effective type antenna. Do not remove shorting clips until the EED is actually ready to be installed.

2.58.8. Power Density Criteria. When electrical characteristics of the EEDs in question are not known or when the minimum safe separation distances cannot be complied with because of lack of real estate or other limitations, a power density and field intensity survey should be made. These measurements are more exacting methods of determining a hazard, since actual conditions are involved rather than "worst case" conditions which are assumed for distances in Figure 2.3. Compare the measured power density with the recommended maximum power density (for the transmitter frequency) found by using the proper formula in Table 2.5. The measured power density should be no greater than the recommended maximum power density.

2.58.9. Multiple Transmitters. When more than one transmitter is operating in a certain area, each at a different frequency and distance from an electro-explosives area, the most realistic method of determining whether a hazard exists is by means of a power density survey. There is no simple method, however, of calculating the recommended maximum allowable power density where multiple transmitters of differing frequencies are involved. To evaluate multiple transmitter exposures, follow the procedures in 2.58.11 below. Include in the request for assistance the required data on each involved transmitter and the results of any power density survey performed

2.58.10. Assistance Requests**.** When a hazardous situation is suspected or the minimum safe separation distances for a particular location are in question, request assistance from higher-headquarters explosives safety personnel. Submit major command requests for assistance to HQ AFSC/SEW when conventional explosive devices are involved and HQ AFSC/SEW and SA-ALC/NWI when nuclear weapons are involved. HQ AFSC determines technical support requirements from AFMC agencies who reply directly to HQ AFSC. HQ AFSC sends decisions to the originating base or command, with information copies to all agencies involved in the decision process. Send information copies of all requests to HQ AFMC/SEW/DRW and applicable air logistics centers, 1839 EIG/EE, and ASC/ENACE. Include all information needed for a complete understanding of the situation. Minimum requirements are:

2.58.10.1. Operating frequencies, pulse widths, pulse repetition frequencies, peak power and average power of each transmitter.

2.58.10.2. Gain characteristics (main and sidelobe), focal length, largest dimension, scan characteristics (rates, dwell times, angles, etc.), and height above the ground for each antenna.

2.58.10.3. Type aircraft, ordnance, and applicable EED involved, along with available characteristics of EED (no-fire power or energy levels).

2.58.10.4. Base layout and contour map of the area. Show transportation routes of EED and ordnance subsystems, location of ordnance and EED maintenance, storage, and assembly and disassembly areas and location of all transmitting antennas.

2.58.11. Examples of Safe Separation and Power Density Calculations:

Example 1. Use Figure 2.3 or the proper formula in Table 2.5 to find the recommended safe separation distance for the following conditions:

Condition of EED: Exposed.

Transmitter frequency = 300 MHz.

Average transmitter power = 1000 watts.

Antenna gain = 15dB.

When using the nomograph:

Step 1. Mark the point where 300 MHz lies on the frequency scale.

Step 2. Determine the effective radiated power (ERP) by multiplying P_tG_t where

P_t = 1000 watts (given)

$G_t = \log^{-1}(GdB/10) = \log^{-1}(15/10) = \log^{-1} 1.5$ (or $G_t = 31.6$):

$P_tG_t = (1000)(31.6) = 31{,}600$ watts.

Mark this spot on the effective radiated power scale.

Step 3. Draw a straight line through the points established in steps 1 and 2 to the distance scale. The recommended safe separation distance, about 250 feet, is read where the line intersects the distance scale.

When using the formula:

Step 1. Find the proper column and formula from Table 2.5. Since the EED is exposed and the frequency is 300 MHz, the applicable formula is: $D = \frac{450}{f} \times \sqrt{P_t G_t}$

Step 2. Determine $P_t G_t$ where

P_t = 1000 watts (given),

GdB = 15

$G_t = \log^{-1}(GdB/10) = 31.6$:

$P_t G_t = (1000)(31.6) = 31{,}600$ watts

Step 3: Substitute these values into the formula: $D = \frac{450}{300} \times \sqrt{31600} = 267$ feet

Example 2: Is EED exposure within the maximum allowable power density, given the following conditions?

Actual measured power density = 450 W/m^2.

Condition of EED: In nonmetallic containers. Frequency: 200 MHz.

Step 1. Find the proper column and formula in Table 2.5. Since the frequency is 200 MHz, the proper formula to determine maximum safe power density is: $P_o = 4.256 \times 10^{-5} \times f^2$.

Step 2. Solve the equation: $P_o = 4.256 \times 10^{-5} \times (200)^2$ which yields $P_o = 1.7\ W/m^2$

Therefore, EED are being exposed to 450 W/m^2, which is more than the computed maximum safe power density.

Table 2.5. Recommended EED Safe Separation Distances and Power Densities.

Column	A	B		C	D		E	F
Configuration of EED	Unknown (Worst Case)	EED in Exposed Condition		EED in Storage or Transport			EED Installed or Onboard Aircraft	Leadless EED
				Metal Container	Nonmetal Container			
		Frequency	Formula		Frequency	Formula		
Recommended Separation Distance (or Formula for Distance)	Use Figure 2.3 or Column B	Up to 20khz	$D = .093 \times \sqrt{P_t G_t}$	$D = .093 \times \sqrt{P_t G_t}$	Up to 63kHz	$D = .093 \times \sqrt{P_t G_t}$	$D = .093 \times \sqrt{P_t G_t}$	D=10 feet
		20kHz to 2MHz	$D = 4.63 f \times \sqrt{P_t G_t}$		63kHz to 2MHz	$D = 1.46f \times \sqrt{P_t G_t}$		
		2MHz to 48.5 MHz	$D = 9.26 \times \sqrt{P_t G_t}$		2 MHz to 48.5 MHz	$D = 2.93 \times \sqrt{P_t G_t}$		
		48.5 MHz to 4.85GHz	$D = \frac{450}{f} \times \sqrt{P_t G_t}$		48.5 MHz to 1.53 GHz	$D = \frac{142}{f} \times \sqrt{P_t G_t}$		
		4.85GHz to 45GHz	$D = .093 \times \sqrt{P_t G_t}$		1.53 GHz to 45 GHz	$D = .093 \times \sqrt{P_t G_t}$		
Recommended Maximum Power Density	$P_o = \frac{0.01W}{m^2}$	Up to 20kHz	$P_o = \frac{100W}{m^2}$	$P_o = \frac{100W}{m^2}$	Up to 63kHz	$P_o = \frac{100W}{m^2}$	$P_o = \frac{100W}{m^2}$	Not Applicable
		20kHz to 2 MHz	$P_o = \frac{.04}{f^2}$		63kHz to 2 MHz	$P_o = \frac{.4}{f^2}$		
		2MHz to 48.5 MHz	$P_o = \frac{0.01W}{m^2}$		2MHz to 48.5MHz	$P_o = \frac{0.1W}{m^2}$		
		48.5 MHz to 4.85 GHz	$P_o = 4.256 \times 10^{-6} \times f^2$		48.5MHz to 1.53GHz	$P_o = 4.256 \times 10^{-5} \times f^2$		
		4.85GHz to 45GHz	$P_o = \frac{100W}{m^2}$		1.53GHz to 45GHz	$P_o = \frac{100W}{m^2}$		

NOTES:

1. In the formulae:
   - D = distance (feet)
   - f = Frequency (MHz)
   - P_t = transmitter power (watts)
   - $G_t = \log^{-1} (G_{dB}/10)$ = power gain ratio of the transmitting antenna.
   - G_{dB} = antenna gain (decibels). G_{dB} should be considered 0 for omni-directional antenna.
   - P_o = recommended maximum power density (watts per square meter)
2. Use peak power for the following:
   - Pulsed systems with pulse width greater than one millisecond.
   - Systems with modulation schemes other than pulsed.
   - Electrically conducting explosive composition type or carbon bridge type EEDs are involved.
3. For pulsed systems with all pulse widths less than one millisecond, use the larger of the following:
   - Average Power.
   - (Peak power) x (largest pulse width expressed in milliseconds)/one millisecond.
4. The formulas above assume an EED with a maximum no-fire sensitivity of 50 milliwatts.
5. PtGt is commonly referred to as the "effective radiated power" and includes antenna efficiency.
6. For frequencies outside the range of Table 2.5, follow the procedures in paragraph 2.58.11.
7. Formulas apply to the far field of the antenna only. For antennas with long focal lengths, see TO 31Z-10-4, chapter 4, section 2, for near field formulas.

Figure 2.3 Recommended Safe Separation Distances for EEDs in Exposed Condition.

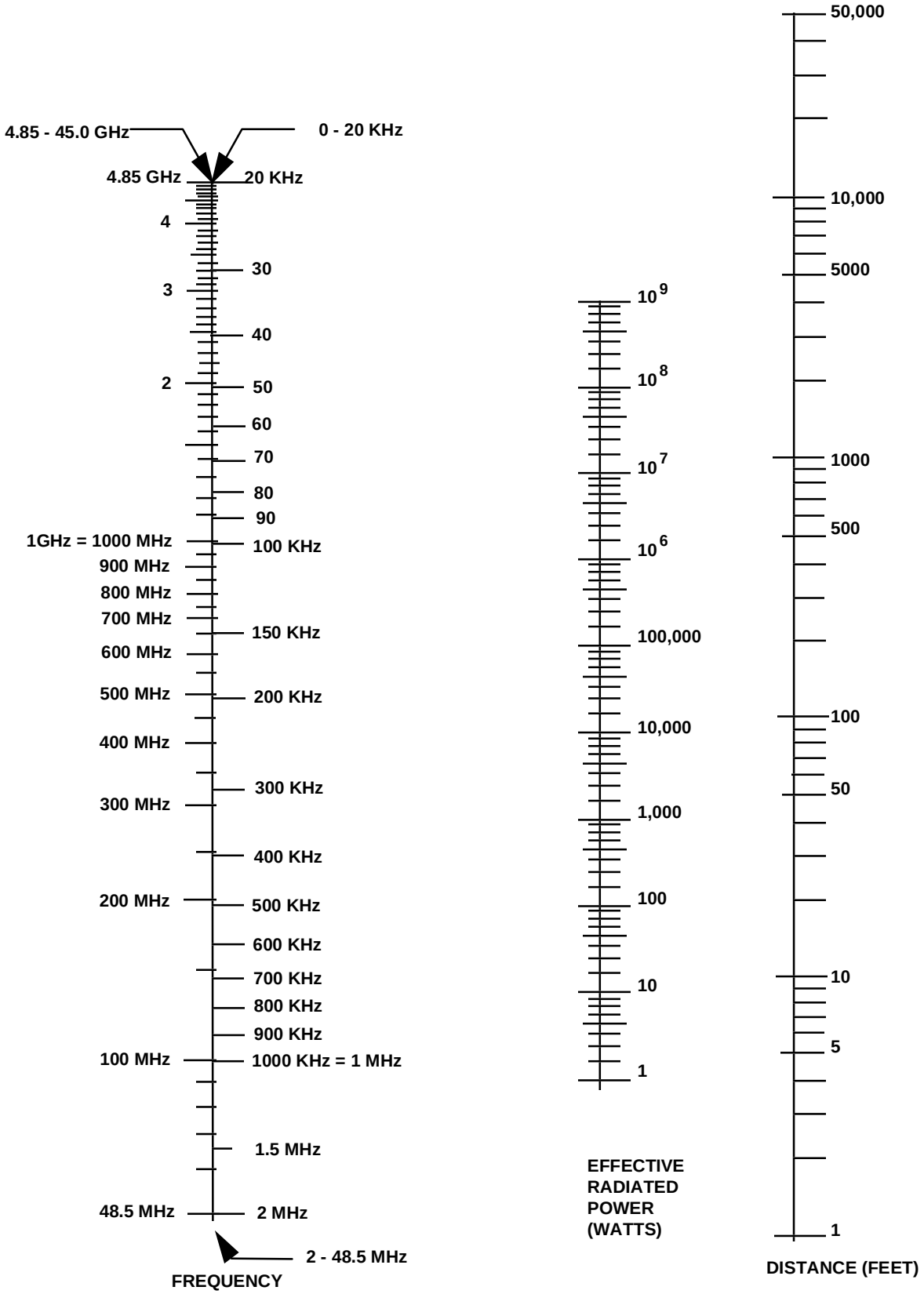

Section E--Transportation

★2.59. Guidance. This section gives safety requirements for transporting explosives and for operating vehicles and materials handling equipment in explosives locations. In-use ammunition items that must accompany security police or other defense forces are not governed by transportation rules. During normal day-to-day operations, security police/forces with in-use ammunition are authorized to carry ammunition into base facilities. However, weapons safety personnel at any level can restrict or limit the HC/D of ammunition being carried into these facilities. Apply safety considerations to the extent possible as directed by major commands (MAJCOM). Quantity-distance (Q-D) criteria does not apply to munitions and explosives in transit. Take precautions to ensure minimum exposure of people and property during all phases of transportation.

★2.60. Federal Regulation. Title 49, Code of Federal Regulation (CFR) regulates commercial shipment of hazardous material, including explosives, by rail, motor vehicle, cargo aircraft and ship within the United States (except maritime explosives). Rules in Title 49-CFR only apply on military installations when specifically prescribed. For transporting explosives and munitions on an Air Force installation use the criteria is this manual. For transporting military explosives and munitions not on an Air Force installation, but in an Air Force conveyance, operated by Air Force personnel, the rules in Title 49 CFR must be applied to the extent they are prescribed in USAF/DoD directives. See paragraph 2.61 for examples, but not an exhaustive list, of such publications.

★2.61. Basic Directives. In addition to this manual, the following directives apply to military shipments of hazardous materials within the defense transportation system: AFJI 11-204, *Operational Procedures for Aircraft Carrying Hazardous Material;* AFJMAN 24-204, *Preparing Hazardous Materials for Military Air Shipment*; TO 11N-45-51 series, *Transportation of Nuclear Weapons, Materiel, General Shipping, and Limited Life Components (LLC) Data; Defense Transportation Regulation (* DTR) 4500.9R *Part 2* and AFJI 24-210*, Packaging of Hazardous Material.*

2.62. Local Laws Regulating Transportation of Explosives and Dangerous Articles. Each state and nearly all local and foreign governments have laws or ordinances regulating transportation of explosives and other dangerous articles within their jurisdiction. Obey local laws where state and local governments have jurisdiction. ***NOTE:*** Where there is exclusive federal jurisdiction, local laws may not apply. Where there is a conflict, contact your MAJCOM for clarification.

2.62. (AFRC) All movements of munitions off-installation must be coordinated with the Base Traffic Management function prior to transport to ensure compliance with all regulatory requirements.

2.63. Hazard Classification Requirements. Explosives, to be acceptable for transportation by any mode, must have an assigned hazard classification (Q-D hazard class/division; storage compatibility group; DOT class, markings, shipping name and label; and United Nations (UN) serial number). Developmental or test items without a final classification must be assigned an interim hazard classification. Procedures and authority for assigning classifications are in TO 11A-1-47. Final and interim hazard classifications assigned by the Army and Navy authority are acceptable to the Air Force.

2.63.1. Commercial explosive items purchased for official use must have a hazard classification assigned in accordance with TO 11A-1-47 before transportation and use, except as provided in paragraph 2.63.2 below. See paragraph 2.8 for exempting fireworks.

2.63.2. Store, transport, or offer for transportation, commercial explosives that have not been examined, hazard classified, and approved by DoD in accordance with 49 CFR 173.56(b)(2), provided:

2.63.2.1. The explosive has been designated, in writing, by the Associate Administrator for Hazardous Materials Safety (AAHMS), Research and Special Programs Administration, U.S. DOT, as “Not Regulated”; or

2.63.2.2. The explosive has been approved for transportation, in writing, by the AAHMS in a Competent Authority Approval, or in a confirmation of acceptability of a foreign Competent Authority Approval, and the hazard classification of the explosive is 1.4S.

2.63.3. Temporary Storage. 49-CFR or AFJMAN 24-204 criteria may be used for temporary mixing of explosives while undergoing packing and unpacking operations or while in temporary storage awaiting shipment. Shipping, receiving and storage facilities must comply with DoD Q-D criteria for the hazard class/division involved.

2.64. Compatibility of Explosives During Transportation. Part 177, Subpart C, Title 49, CFR provides guidance for separating and segregating hazardous materials, including different explosives, in the various modes of commercial transportation. Explosives transported on a public highway by Air Force motor vehicles, operated by Air Force personnel, will be separated and segregated using the rules in Title 49, CFR, except as otherwise provided in this manual or other applicable military directives. When an item containing explosives is assigned to other than hazard class 1 because of the predominant hazard, a compatibility group is still assigned. See paragraph 3.4. For these items compatibility for transportation, and temporary storage incident to transportation, must be based on rules for the assigned hazard class, not on the compatibility group. The compatibility group for these items applies only to long term storage. Cargo-configured items that may be shipped in the same Air Force aircraft are listed in AFJMAN 24-204, *Preparing Hazardous Materials for Military Air Shipment* and TO 11N-45-51 series, *Transportation of Nuclear Weapons, Materiel, General Shipping, and Limited Life Components Data*. ***NOTE:*** Nothing in this paragraph is to be construed to prohibit:

2.64.1. Development of new items for transportation by combining previously hazard classified components into an increased state of assembly to meet a valid military need. Use normal hazard classification procedures (TO 11A-1-47) to obtain the hazard classification and approval for transportation applicable to the new configuration.

2.64.2. Movement of assembled or partially assembled explosive items between servicing explosives locations and aircraft loading points or other such locations on the same military installation, when the assembly has not been classed and approved as provided in TO 11A-1-47, but is necessary to meet valid operational requirements. If the operational requirement is expected to continue or can be anticipated, seek hazard classification and approval.

★2.64.3. Movement in a military vehicle of minimum quantities of explosive items necessary for demolition operations, to include proficiency training. Blasting caps, demolition explosives and unserviceable (but not dangerously unserviceable) munitions may be transported by the same vehicle, provided MAJCOM approves the mixing of all applicable compatibility groups. See para 2.70 and 2.70.1 for restrictions concerning the carrying of explosives inside passenger compartments.

2.64.3.1. (Added-AFRC) EOD or Red Horse may transport demolition explosives and initiation devices in the same vehicle. In addition, EOD may also transport unserviceable munitions with demolition explosives and initiating devices.

2.64.3.2. (Added-AFRC) Prepare an explosive site plan for the marshaling locations for explosive loaded EOD, security forces, or civil engineering

2.64.4. Transport dangerously unserviceable munitions in a separate military vehicle. If transport in a separate military vehicle is not possible , segregate and sandbag from other explosives being transported. Transport dangerously unserviceable munitions only on base and when the munition has been determined safe for transportation by qualified personnel as specified by the MAJCOM.

2.64.4. (AFRC) Contact HQ AFRC /CEX for guidance and direction.

2.64.5. Movement by a DoD-owned vehicle, operated by DoD personnel, of mixed loads consisting of components (not otherwise compatible for transportation), in the numbers and of the types necessary to assemble a number of complete rounds of a single type, when essential to meet operational requirements, and when separate (unmixed) movement is not feasible. (See AFJI 24-211 Vol 1, *Defense Traffic Management Instruction*, for procedures where such exceptions to compatibility rules are required.)

2.64.6. Movement by a DoD-owned vehicle, operated by DoD personnel, or a mixed load of small quantities of items (not to exceed 1,000 pounds total NEW) from compatibility groups B through J, N and S. The NEW of 1,4S items need not be included.

2.65. Packaging. Packaging of explosives offered for shipment must comply with Title 49, CFR, Part 173, or AFJMAN 24-204 specifications, as appropriate. Follow these instructions:

2.65.1. Locally made packaging must meet the construction and marking requirements in Title 49, CFR, or must conform with a military Certification of Equivalency for the item being packed.

2.65.2. Mark each package to identify contents. The DOT marking consist of the Proper Shipping Name; United Nations Identification Number; and the EX-number, national stock number or other product code as specified in the hazard classification. See TO 11A-1-46, AFJMAN 24-204, TO 11N-45-51, or the Joint Hazard Classification System listing, as appropriate.

2.65.3. If an item is not listed in above references, contact OO-ALC/LIW Hill AFB UT 84056-5609 for the required data.

2.65.4. Do not open or repair a package in a railcar, motor vehicle, or aircraft unless it is essential for inflight safety or to safely unload a damaged package. Avoid re-nailing boxes because of the potential to strike the explosives with the nail.

2.65.5. If a package is damaged or defective, remove it from the transporting vehicle at the earliest opportunity for repair.

2.66. Shipment of Explosives Which Have Been Damaged or Failed To Function. If it is necessary to ship an explosive item that has been damaged, subjected to abnormal force or has failed to function, ask the responsible AFMC (prime ALC) element for shipping, packing, marking and safety instructions.

2.67. Guides for Controlling Incoming Explosives Shipments. Review guidance in Defense Logistics Agency Handbook 4510.3, *Terminal Facilities Guide, United States Air Force*. The base transportation officer is responsible for maintaining the base information current in the Terminal Facilities Guide. Clearly state in notification procedures the net explosives weight, by hazard class/division, that can be received at unloading facilities (i.e., railheads, ports, hot cargo pads, etc.) Process proposed amendments to this publication promptly.

2.68. Explosives Movement Routes on Base. Designate the safest possible primary and alternate explosives movement routes to cover all phases of movement. Identify routes and any limitations on explosives quantities by hazard class/division in base publications. Avoid built-up areas and key, mission-oriented facilities and equipment to the maximum extent possible. ***EXCEPTION:*** *Movements of munitions within a munitions storage area or to and from licensed storage locations are not restricted to designated routes.*

2.68. (AFRC) Provide copies of maps showing on-base explosives movement routes as a minimum to the following agencies: base fire station, security force/law enforcement, munitions control/MOC, Air Base Operability, EOD, base operations, and host/tenant safety office.

2.69. Safe Haven. When the Military Traffic Management Command (MTMC) requests Safe Haven for a shipment of explosives, the responsible commander may authorize explosives laden carriers to temporarily store their cargo. This storage area should be as remote as practical from populated areas and POL sites. The authorization is not to exceed the duration of the emergency. See AFI 32-4001 for information.

★2.70. Vehicle and Materials Handling Equipment General Safety Requirements. Do not transport explosives in a passenger compartment of a vehicle. When units responsible for demolition are issued vehicles without separate cargo compartments, trailers will be used to the maximum extent possible. ***EXCEPTIONS:*** *Minimum essential personnel and limited quantities of HC/D 1.4, 1.3, and (04) 1.2 explosives, as approved by a local OI, may be transported together in cargo portion of vehicles (including "Metro" types used on flightlines) or in vehicles used as runway supervisory unit (RSU).*

2.70.1. For emergency responses in vehicles without separate cargo compartments (i.e. Robot Vans, Metro type vehicles, M1026), EOD units are authorized to transport minimum required quantities of HC/D 1.1 inside the vehicle. Separate the incompatible explosives to the maximum extent possible.

2.70.2. B-1B egress system class/division 1.1 assembled components may be transported in the cargo compartment of Metro-type vehicles.

2.70.3. Basic load munitions issued to emergency response personnel in the performance of their duties are exempt from these requirements. (Basic loads can include 1.1 40mm grenades, LAW rockets, etc.) However, transportation of re-supply stocks must comply with all the requirements of this paragraph.

2.70.4. When units responsible for demolition operations are issued vehicles without separate cargo compartments, such vehicles may be used to transport minimum quantities of explosives necessary to support demolition operations.

2.70.5. Transport explosives in their approved storage and shipping packaging. If less than a single shipping package must be transported, pack the explosives separately from other items in closed, clearly identified metal or wooden containers.

2.70.6. Provide personnel seats. See AFI 91-207 for information.

2.70.7. Do not leave explosives-laden vehicles unattended. See paragraph 2.56.1. for lightning exception.

2.70.8. Aircraft seats or survival kits with explosive devices installed must contain required safety pins and devices and be secured to prevent movement during transit.

2.70.9. Military Working Dog HC/D 1.1 explosive training aids may be transported and handled by qualified personnel in areas which provide realistic and effective training.

2.70.9.1 Vehicles transporting explosive dog kits must be properly placarded.

2.71. Transporting Explosives.

2.71.1. Electroexplosive Devices. Vehicles with plastic bed liners may be used to transport EED's that are in their original sealed outer package, box, or container. Metal ammo-type containers may be used to transport EEDs in vehicles with plastic bed liners if the containers provide the protection required by paragraph 2.12.1 and are bonded to the metal body of the vehicle.

2.71.2. Placarding Vehicles.

2.71.2.1. Use DOT placards as outlined in Subpart F of Title 49, CFR, Part 172.

2.71.2.2. Commanders may omit placards on base where necessary to avoid attention of hostile forces. Instruct all personnel in proper emergency actions. When transporting munitions off the installation in a foreign country comply with host nation requirements.

2.71.2.3. Where tow vehicle and trailer combinations are used on base, placard the lead vehicle on the front and the last vehicle on the rear. Placard loaded vehicles in between on each side.

2.71.2.4. Placard materials handling equipment only when used in the same manner as a transport vehicle or trailer.

2.71.2.5. Placards may be omitted for HC/D 1.4 material if the aggregate gross weight is less than 1000 pounds.

2.71.2.6. Compatibility group letters may be omitted from the placard if the vehicle remains on the installation.

2.71.2.7.(Added-AFRC) The following requirements apply when higher headquarters evaluator teams are using rental vehicles on base in the performance of military duties:

2.71.2.7.1. (Added-AFRC) Use DOT placards.

2.71.2.7.2. (Added-AFRC) Transport items in containers and/or original packaging to prevent item to item contact.

2.71.2.7.3. (Added-AFRC) Secure containers within the vehicle, to prevent movement.

2.71.2.7.4. (Added-AFRC) Do not transport containers in vehicle passenger compartments.

2.71.2.7.5. (Added-AFRC) Do not transport more than 10 munitions items at any given time(example: 3 smoke grenades, 3 ground burst simulators, 4 airburst simulators).

2.71.2.7.6. (Added-AFRC) Appropriate fire extinguishers, as approved by the fire department, will be available in the passenger compartment.

2.71.2.7.7. (Added-AFRC) Notify the fire department of make, model, and license number of all vehicles transporting munitions items.

2.71.2.7.8. (Added-AFRC) Return all remaining explosive items to their licensed location or munitions storage area, when not required for use during normal exercise duties.

2.71.2.8. (Added-AFRC) Adhere to DOT Requirements when off-installation.

2.71.3. Load Protection. Ensure lifting devices on vehicles or handling equipment have a serviceable mechanism designed to prevent sudden dropping of the load in event of power failure.

★2.71.4. Load Stability. Ensure explosives loaded on all types of vehicles and handling equipment are stable and secure before movement. Load stability is required for all movements, to include rewarehousing or other activities conducted between one or more storage magazines/pads or other operating location. "Secure" means the load is protected by an effective restraining system.
★2.71.4.1. Consider vehicle and handling equipment type, type of load, and the prevailing weather and road conditions when determining if safe transport is feasible. This guidance pertains to munitions storage area as well as applicable flightline operations.
2.71.4.2. Loads on the tines of a forklift must not extend more than one-third of the height of the top tier of containers above the backrest.
2.71.5. Vehicle Refueling. Refuel non-explosives loaded vehicles and equipment at least 100 feet from structures or sites containing explosives.
2.71.5.1. When refueling explosives-loaded vehicles, maintain a bonded path between the tank being filled and the tank being emptied. Ground the entire system.
2.71.5.2. When refueling is completed, remove refueling vehicle from the storage area.
2.71.5.3. Use the smallest available size of refueling unit.2.71.5.4. One person must be present during the entire operation. During refueling, stop motors of vehicle being refueled and refueling truck (unless refueling truck motor drives the pump).
2.71.5.5. In event of a fuel spill, immediately notify the base fire department. Do not start motors of refueling truck or unit being refueled until area is rendered safe.
2.71.5.6. For refueling aircraft use procedures in the applicable TO.
2.71.6. Exposed Explosives Precautions. Do not use battery, gasoline or diesel-powered vehicles and materials handling equipment inside any structure or building containing "exposed explosives." Vehicles or equipment may be used within the vicinity of structures containing "exposed explosives" providing:
2.71.6.1. Gasoline or diesel-powered units have exhaust system spark arrestors and, where applicable, carburetor flame arrestors (standard air cleaners).
2.71.6.2. Spark arrestors will meet military specifications for the particular equipment and will be installed so they will not become clogged in normal operation (AFOSH Standard 127-66, *Occupational Safety General Industrial Operations*, and TO 38-1-23, *Inspection and Installation of Exhaust Spark Arrestors and Exhaust Purifiers (Catalytic Mufflers) on Non-Aircraft Engines*).
2.71.6.3. Vehicle operators inspect spark arrestors before each daily use and clean them if there is an excess of carbon particles.
2.71.7. Liquefied Petroleum (LP) and Compressed Natural Gas (CNG) Fueled Vehicles. Motor vehicles or other equipment used to transport explosives which utilize LP or CNG for propulsion must have a fuel system which complies with the current edition of the National Fire Protection Agency, Standard 58, Section 8.2.6, Engine Fuel Systems.
2.71.8. Safety Chains. Fasten safety chains between towing vehicles and trailers carrying explosives when lunette and pintle fastenings are used. Safety chains are not required when using specifically designed "breakaway control" safety features prescribed by the pertinent TO.
2.71.9. Storage. Battery, gasoline, LP, CNG, or diesel-powered equipment may be stored in a magazine, storehouse or other suitable location that contains only inert materials. Keep equipment at least 10 feet from combustible material. Keep aisles clear at all times and space to minimize spread of fire from one unit to another. Equipment essential to day-to-day operations may be parked in fire-resistive buildings containing explosives. The following minimum requirements must be met:
2.71.9.1. Use fire walls and closed doors to completely separate equipment from bays, rooms or cubicles containing explosives.
2.71.9.2. Ensure designed fire-resistant ratings for the enclosures containing explosives are not degraded.
2.71.9.3. Battery charging must comply with AFOSH Standard 91-66
2.71.9.4. Safety and fire protection personnel must review the local situation for any additional measures necessary to enhance safety.
2.71.10. Operating Inside Structures. Concentration of carbon monoxide in the operating area must not exceed the current occupational exposure limit as defined by AFOSH Standard 48-8, *Controlling Exposures to Hazardous Materials*. Consult the local bio-environmental engineer (BEE) for a determination of exposure levels, applicable exposure standards, and recommended controls.

2.72. Battery-Powered Materials Handling Equipment. Battery-powered equipment is preferred for handling explosives and should be used when possible.
2.72.1. Battery-powered equipment used within an explosives area will have all electrical cables mounted to prevent catching on stationary objects or damage by cutting or abrasion. Cables will be protected to prevent short circuiting as far as is practicable.
2.72.2. Batteries will be securely fastened. Battery boxes will give ample ventilation, with ventilation openings that prevent access to the cell terminals from the outside.
2.72.3. Battery-powered equipment must be equipped with a dead-man switch and a main service switch that can be operated from the driving position.

2.73. Gasoline or Diesel-Powered Materials Handling Equipment.

2.73.1. Equip with a standard muffler and air cleaner.
2.73.2. Ensure gas caps are in place.
2.73.3. If necessary, install a deflector plate to prevent overflow from the fuel tank from reaching motor or exhaust pipe.
2.73.4. On gravity feed fuel systems or on pump systems that can be siphoned, install an emergency shutoff valve at fuel tank or in the feed line.
2.73.5. Protect fuel lines from rupture due to vibration.
2.73.6. Securely fasten electrical connections to prevent accidental disconnection which might result in sparks or fire.
2.73.7. Do not use equipment in areas classified as hazardous locations for electrical equipment.

2.74. Motor Vehicle Transportation.
2.74.1. Cover exposed ferrous metal in the cargo compartment before transporting explosives that are not packaged in DOT specified containers or equivalent.
2.74.2. Use only static resistant and noncombustible or flameproof tops or coverings.
2.74.3. Prior to use, inspect motor vehicles used to transport explosives to determine that:
2.74.3.1. Fire extinguishers are filled and are in good working order. A minimum of two 10BC or greater fire extinguishers are required for each vehicle transporting explosives.
2.74.3.2. Electric wiring is in good condition and properly attached.
2.74.3.3. Chassis, motor, pan, and underside of body is reasonably free of oil, grease, and fuel.
2.74.3.4. Fuel tank and feed lines are secure and not leaking.
2.74.3.5. Brakes, steering, lights, horn and windshield wipers are functioning properly.
2.74.3.6. Tires are properly inflated and free of defects.
2.74.4. Chock explosives loaded vehicles and trailers parked on any grade or ramp steep enough to cause vehicle to roll.
2.74.5. Refuel trucks before loading explosives.
2.74.6. Do not operate vehicles containing explosives until the cargo has been checked to ensure safe transportation. For on base movements, explosives containers must be restrained, blocked, braced, tied down or otherwise secured to the vehicle to prevent movement and must not damage explosives or containers. Restraining devices may include chains and binders, cargo nets and tie-down straps, sideboards and tailgates, etc.
2.74.7. When transporting items containing EEDs, fully consider hazards discussed in paragraph 2.51.
2.74.8. Do not leave explosives-laden vehicles unattended unless they are parked in a properly designated area, such as the weapons storage area, holding yard or flightline munitions holding area. (See paragraph 2.56.1. for lightning exception.)
2.74.9. Ensure forklifts use skids or pallets to move containers of explosives, except when containers are designed with fully enclosed stirrups (360 degrees) for forklift tines.
2.74.10. Munitions may be carried on forklift tines when the weapon body is long enough to be firmly supported on both tines and strong enough to prevent damage.
2.74.11. Do not load or unload explosives from a motor vehicle while the engine is running, except under the following conditions:
2.74.11.1. Where the engine is required to provide power to vehicle mechanical handling equipment used in loading and unloading the vehicle.
2.74.11.2. Where necessary for emergency operations or timing for exercises simulating execution of emergency plans. In this case, small loads or packages of explosives delivered to aircraft, requiring only momentary unloading time, may be removed from a vehicle while the motor is running.
2.74.11.3. Engines of diesel-powered vehicles may continue to run during loading or unloading of explosives except when exposed explosives are involved.
2.74.11.4. Adequate ventilation is provided to prevent unnecessary build-up of exhaust gases.
2.74.12. The vehicle is kept at the aircraft or storage location no longer than needed to complete explosives loading or unloading. If a delay occurs, move vehicle from location.
2.74.13. Parking brakes are set and the operator remains in the driver's position or sets brakes, chocks wheels and remains close to the vehicle.
2.74.14. Where the vehicle was designed and built for these operations. Refer to drivers manuals for accepted procedures.
2.74.15. Inspection of Incoming Shipments**.** All incoming motor vehicles carrying hazard class 1 explosives and other hazard class items that carry an explosives compatibility group, except HC/D 1.4, will be inspected at a designated inspection station by a representative of the commander before further routing on base. If used solely as an inspection area, Q-D does not apply.
2.74.15.1. The inspection station should be as remote as practical from hazardous areas such as explosives, POL sites, populated areas, and flightlines.
2.74.15.2. If the inspection station is used as an explosives storage or suspect vehicle holding area, it must meet Q-D criteria. Also, vehicle inspections must be stopped while storage or operations are in progress.
2.74.15.3. The inspection station may be used as an interchange yard .
2.74.15.4. Inspections will be done using DD Form 626, **Motor Vehicle Inspection (Transporting Hazardous Material**).
2.74.15.5. Once a vehicle has passed the initial inspection, a visual inspection of the external condition of the cargo may be done at any suitable location, including the unloading point.

2.74.15.6. Any vehicle found or suspected to be in a hazardous condition will be moved to a "suspect vehicle" area which is isolated from other locations by the proper Q-D, unless it is more hazardous to move the vehicle.
2.74.16. Inspection of Outgoing Shipments**.** All vehicles to be used for off-base shipments of explosives will be inspected by shipping activities before and after loading for compliance with safety regulations.
2.74.16.1. Complete DD Form 626 according to DTR 4500.9R Part 2.
2.74.16.2. Maintain a record of the vehicle number, the type of explosive cargo, and the number of each seal applied to the vehicle.
2.74.16.3. Air Force drivers must be qualified to operate the vehicle and knowledgeable of the explosives being transported and associated hazards. In addition, Air Force civilian drivers must have a Commercial Drivers License, with a hazardous materials endorsement, to transport explosives off a military installation. See AFI 24-309, chapter 4.
2.74.16.4. DD Form 836, **Shipping Paper and Emergency Response Information for Hazardous Materials Transported by Government Vehicles**, will be used to instruct drivers on the nature of their cargo, firefighting methods, and other specific precautions for the particular shipment. Information on the preparation and use of DD Form 836 is in DTR 4500.9R Part 2
2.74.16.5. Overseas units should use bilingual instructions on the DD Forms 626 and 836 where needed.
2.74.16.6. Where special purpose vehicles are authorized to transport explosive loads, applicable technical data will be used.
2.74.16.7. Use of DD Forms 626 or 836 is not required for military vehicles or drivers transporting explosives (assembled or partially assembled in a delivery mode) across or on public highways from one part of a base to another. For example, transportation of munitions from a preparation area across the highway to the main base flightline, or on the highway to a nearby auxiliary field. If this is a daily operation, there should be an agreement with local authorities on any local restrictions to be imposed.
2.74.17. Internal Shipments by Commercial Carrier. Commercial carriers used to move explosives over public highways from one area to another area of an installation will be externally inspected before entering the second area. This is not needed if they were escorted or under surveillance en route.
2.74.18. Interchange Yards. Where necessary, an interchange yard may be established in a remote area on the same basis as, or together with, the inspection station in paragraph 2.74.15.1 above. This location will be used for the exchange of tractor trailers between the common carrier and the base activity involved. Explosives Q-D criteria will not be applied if the exchange is made and the vehicles removed promptly.
2.74.19. Holding Yards**.** If the explosives-loaded vehicles cannot be dispatched to unloading points immediately, they must be moved to a holding yard.
2.74.19.1. Site holding yards as above ground magazines according to chapter 3.
2.74.19.2. Where possible, explosives-loaded vehicles should be separated from each other by the applicable aboveground magazine distance.
2.74.19.3. If magazine distance between vehicles cannot be met, vehicles should be parked in groups, with magazine separation between each group. Distances to other exposures will then be based on the total amount of explosives within a group of vehicles.
2.74.19.4. Where neither 2.74.19.2 nor 2.74.19.3 above is possible, the total explosives weight of all vehicles will be used to determine separation distances.
2.74.19.5. Loaded vehicles should not remain in a holding yard for a period exceeding one working day.
2.74.19.6. Holding yards may be used for interchange and inspection activities. However, when loaded vehicles are being held there, the yard may not be concurrently used for vehicle inspections.
2.74.20. Maintenance of Vehicles Carrying Explosives:
2.74.20.1. Only operator inspection and maintenance normally related to the operation of a vehicle will be done on explosives-laden vehicles. Such maintenance includes servicing with fuel, oil, air, lubrication and water, changing tires, fuses, hoses and drive belts, etc.
2.74.20.2. No maintenance will be done on an explosives-loaded vehicle or trailer that would increase the probability of fire or would require the use of heat-producing equipment.
2.74.20.3. No restrictions are imposed on tractor maintenance when the tractor is separated by at least 50 feet from an explosives-loaded trailer.
2.74.20.4. When tires are being changed, the vehicle or trailer must not be elevated so as to shift the load or place an excessive strain on the tiedowns.
2.74.20.5. Vehicles carrying nuclear weapons are subject to the maintenance restrictions in TO 11N-45-51 series.

2.75. Transporting Dangerously Unserviceable Explosives Items for Disposal. Package and mark dangerously unserviceable items such as partially burned signals as specified in an item or EOD technical publications and OIs. Consult EOD before transporting dangerously unserviceable items other than as approved by DOT. DoD personnel who are properly trained in procedures to be followed and specific hazards of the material may routinely transport explosive item residue. Inspect vehicles using DD Forms 626.

2.76. Railroad Transportation. DOT safety regulations for safety devices, safeguards, design of equipment, etc., are mandatory for railway equipment transporting materials outside an installation. These regulations should also be followed within an installation. Special attention should be given to rail clearances to buildings, loading docks, overhead lines, etc.
2.76.1. Locomotives. Portable fire extinguishers will be carried on all locomotives and other self-propelled rail vehicles.

2.76.2. Track Layout. Railroad lines serving explosives areas should be looped to give at least two ways of exit.

2.76.3. Movement of Railcars Containing Explosives:

2.76.3.1. By Engine. Secure load and cut in air brakes before movement. Cars should not be uncoupled while in motion or pulled apart by locomotive power.

2.76.3.2. By Car Mover. Station an individual at the hand brake during any manual movement of a car.

2.76.4. Spotting Railcars:

2.76.4.1. Set hand brakes and properly chock wheels when spotting single cars. When more than one car is spotted and the engine detached, set hand brakes on the downgrade end of the cut of cars. Do not rely on the automatic air brakes to hold spotted cars.

2.76.4.2. Locomotives will not stop in front of buildings and loading docks containing hazardous materials longer than needed to "spot" cars for loading or unloading.

2.76.4.3. Cars at a magazine or building should be located so that personnel may evacuate the building or car rapidly if necessary.

2.76.5. Switching Railcars. Special care will be taken to avoid rough handling of cars.

2.76.5.1 Cars must not be "cut off" while in motion. Cars will be coupled carefully to avoid unnecessary shocks. Other cars will not be "cut off" and allowed to strike a car containing explosives.

2.76.5.2. Place cars in yards or on sidings so they can be quickly removed from the danger of fire and handled as little as possible. They will not be placed under bridges or alongside passenger sheds or stations. Engines on a parallel track should not be allowed to stand opposite or near them.

2.76.5.3. "Dropping," "humping," "kicking," or use of the "flying switch" is prohibited.

2.76.6. Marking Railcars with Blue Flags or Signals. Place blue flags or signals at both ends of a car when personnel are working in, on, or under the cars. Do not move or couple cars marked in this manner. The supervisor or foreman in charge of the personnel loading or unloading the cars is responsible for placing and removing the blue flag or signal. Inform train crews in the use of blue flags or signals. ***EXCEPTIONS:*** *1. Flags are not required when flat cars are involved and the presence of a working party is clearly evident. 2. Flags or signals may be omitted from the end of a car located against or toward a dead end spur. This also applies to a loading ramp where no other rolling stock can approach from that direction.*

2.76.7. Control of Vegetation Along Railroad Right-of-Way. Control vegetation, which presents a fire hazard to explosive laden cars, along the railroad right-of-way on the base as directed in paragraph 2.21.2.

2.76.8. Loading Railcars. Inspect car thoroughly, inside and out, to determine its suitability to carry the type of explosives involved. “Broom clean” the interior of the car before loading explosives.

2.76.8.1. Remove or cover protruding nails and bolt heads to prevent damage to packages. Provide substantial gangways. Remove any obstructions that may prevent free entry to the car. Clear immediate area of leaves, dry grass, and other flammable materials.

2.76.8.2. Close the car and magazine doors during loading operations when engines or speeders are passing.

2.76.8.3. Do not leave cars partly loaded unless it is impossible to finish loading at one time. In this case, lock car doors. If it becomes necessary to move a partially loaded car brace the load.

2.76.8.4. During and after loading, properly brace and stay the shipment, then properly seal car, and keep a permanent record of car numbers.

2.76.9. Loading and Bracing Guidance. When loading freight cars, consult Bureau of Explosives Pamphlets 6 and 6A for guidance unless specific instructions or car loading drawings are available for the items involved. These pamphlets govern the method of loading, staying, and bracing of carload and less than carload (LCL) shipments of explosives. Refer to Bureau of Explosives Pamphlet 6C for guidance in securing truck bodies or trailers on flat cars. Also see this pamphlet for loading, blocking, and bracing of the cargo within, or on, such vehicles or containers. The carrier or cargo must not shift under an impact of 8 miles per hour from either end. Obtain Bureau of Explosives pamphlets by writing: Bureau of Explosives, 50 F St. NW, Washington DC 20336.

2.76.10. Placarding of Railcars. Placard railcars transporting explosives according to paragraph 2.71.2.1 or those of the host nation involved.

2.76.10.1. Display placards when the first container of explosives is loaded in the railcar. Remove placards when the last container of explosives is removed from the railcar. Four placards are required for each railcar. It is the responsibility of the shipper to furnish the needed placards.

2.76.10.2. Where necessary, to avoid attention of hostile forces, commanders may omit placards when arrangements are made with the host nation or governmental agency involved. Instruct all involved (including essential train crews) in proper emergency actions.

2.76.11. Railcar Requirements. Cars used for the shipment of material requiring placarding under Title 49, CFR, Part 172, must meet standards for the class of material being shipped as specified in Title 49, CFR, Part 172. Inspect cars for HC/D 1.1 explosives before and after loading. Accomplish, distribute and affix car certificates according to Title 49, CFR, Part 174.104.l.

2.76.11.1. Leaking Packages in Railcars. Continually be alert to detect leaking packages or leaking tank cars. Remove and repair leaking packages from cars. In the case of tank cars, transfer the contents. Switch leaking tank cars containing compressed gases to a location distant from habitation and highways. Take action to transfer contents.

2.76.11.2. Protect cars containing leaking packages or leaking tank cars to prevent ignition of liquid or vapors.

2.76.11.3. Hold to a minimum the movement of a leaking car until the unsafe condition is corrected. If artificial light is necessary, use only approved explosion proof electric lights.

2.76.11.4 Tools for Loading and Unloading Railcars. Steel tools, used with reasonable care, may be used inside cars if explosives are not exposed. When explosives are exposed, special care will be taken to prevent sparks.

2.76.12. Sealing Railcars. Seal cars containing explosives with railway-type car seals stamped with an identifying number. The shipper will keep a record of car numbers and seals (see AFJI 24-211 Vol 1, for additional car seal regulations). If the seal is not in place when the car is received, thoroughly inspect the car at a suspect car site.

2.76.13. Changing Car Seals. When a car seal is changed on a car of explosives, record the following information:

2.76.13.1. Railroad.

2.76.13.2. Place.

2.76.13.3. Date.

2.76.13.4. Number or description of seal broken.

2.76.13.5. Number or description of seal used to reseal car.

2.76.13.6. Reason for opening car.

2.76.13.7. Condition of load.

2.76.13.8. Name and occupation of persons opening car. Document this record on waybills or other forms or memorandum that accompanies car to destination.

2.76.14. Inspection of Incoming Loaded Railcars:

2.76.14.1. A competent representative will inspect railcars containing explosives at a designated inspection station.

2.76.14.1.1. Locate the inspection station as remote as practical from any hazardous or populated area. If possible do not locate near any petroleum (POL) sites, other explosives locations, flightlines or populated areas.

2.76.14.1.2. Inspect the outside and underside of each car to detect damage (such as defective brakes, couplings, wheel flanges, or hot boxes) or unauthorized and suspicious articles. Check individual car numbers and seal numbers against bills of lading.

2.76.14.1.3. If pits are not available, conduct inspections from ground level. Provide pits if sabotage is possible.

2.76.14.1.4. If rail traffic is heavy enough or in an emergency, a pit will help in inspecting and moving cars rapidly.

2.76.14.2. Isolate cars of explosives for prompt corrective actions when foreign and suspicious articles have been attached outside or underneath the car. Also isolate when there is a defect that could affect installation safety or car contents.

2.76.14.2.1. Move car, unless the problem prohibits, over the safest route to a location separated from other areas by proper inhabited building distances.

2.76.14.2.2. Correct the unsatisfactory conditions before the car and cargo are released from the designated "suspect car" site, unless a determination is made that they are safe to move.

2.76.14.3. If the seal numbers on a car do not correspond to the numbers shown on the bill of lading, treat as a suspect car. Remove it to the suspect car siding for additional inspection, as under (2) above.

2.76.14.4. Visual inspection of the external condition of the cargo in cars that pass the initial inspection may be done at any suitable place, including the unloading point. Such cars may be considered reasonably safe. However, exercise care in breaking seals and opening doors because of the potential for shifted loads or leaking containers.

2.76.14.5. If warranted by the inspection results, promptly remove cars from the inspection station.

2.76.14.6. Do not use the inspection station as an explosives location or holding yard unless Q-D criteria are applied. If necessary, use the inspection station as an interchange yard (2.76.15 below).

2.76.14.7. Externally inspect commercial carriers used to move explosives through a public access route, from one area to another area of the installation, before entering the second area. This is not needed if it is escorted or under surveillance enroute.

2.76.15. Rail Interchange Yards. Rail interchange yards are set up and operated on the same basis as truck or trailer interchange yards. The rules in paragraph 2.74.18 apply.

2.76.16. Rail Holding Yards. If the car cannot be dispatched immediately to the point where it is to be unloaded, move it to a holding yard. Rail holding yards, where required, are set up and operated on the same basis as holding yards for motor vehicles. The rules in paragraph 2.74.19 apply. In developing large holding yards, consider the following layout guidance:

2.76.16.1. Design rail holding yards on a unit car or explosives weight group basis. (For example, 50,000, 100,000, or 250,000 net pounds of HC/D 1.1 explosives, regardless of the number of cars involved). Separate each explosives quantity car group from all other groups by intermagazine distance.

2.76.16.2. Yards may be formed by two parallel ladder tracks connected by diagonal spurs or by a "Christmas tree" arrangement (a ladder track with diagonal dead-end spurs projecting from each side at alternate intervals). Other arrangements tailored to the operation are allowed. However, separate parallel tracks and spurs of all types by intermagazine

distances for the group quantities of explosives involved.

2.76.17. Classification Yards. Where the volume of rail traffic necessitates, establish a classification yard primarily for receiving, classifying, switching, and dispatching explosives-laden rail cars. The following rules apply:

2.76.17.1. Intermagazine Q-D separation is required, as a minimum, between explosives locations of all types and the classification yard.

2.76.17.2. Car inspection station activities above may be done in classification yards, if such yards are remotely located according to the cited paragraph.

2.76.17.3. Interchange yard activities under paragraph 2.74.15 may be done in classification yards, if such yards are remotely located according to the cited paragraphs.

2.76.17.4. If required, open cars in the yard to remove documents or to visually inspect the external condition of the cargo if opening the car can be done in the normal manner. Freeing or repairing a stuck or damaged car door or doing any work inside a car is prohibited unless Q-D requirements can be met.

2.76.17.5. The Q-D criteria other than in 2.76.17.1 above do not apply to a classification yard used exclusively for the purposes outlined above. If yards are used for other purposes (such as placing or removing dunnage or explosive items into or from cars), Q-D criteria will apply.

2.76.18. Trailers on Flat Cars (TOFC) or "Piggyback" Explosives Loading and Unloading Sites. This transportation method is considered a "change-of-mode" during loading or unloading operations and Q-D does not apply. Use good judgment in the site choice and for proper control of operations in the local environment. Lifting military vans (MILVAN) or ISO containers to and from flat cars is also considered a “change of mode”. The following instructions govern siting and use of explosives TOFC railheads.

2.76.18.1. Choose a location as remote as practical from hazardous or populated areas.

2.76.18.2. Maintain clear zones around sites as outlined in paragraph 4.15 to prevent encroachment.

2.76.18.3. Provide adequate facilities for the operation and designate safe loading or unloading ramps.

2.76.18.4. Control loading or unloading operations to reduce exposures to a minimum.

2.76.18.5. Quickly remove trailers from the railroad car and send at once to their destination or schedule for prompt loading on arrival at the site. If there is an unforeseen delay in loading or unloading, an explosives-loaded trailer may be kept at the site for a period not exceeding one working day.

2.76.18.6. Don't open piggyback shipping trailers and containers at the site except for emergency or suspected emergency situations. ***EXCEPTION****: "Shipping and Storage Containers, Ballistic Missile" (SSCBM) received by TOFC may be opened at the site for inspection and road transport preparation as required by pertinent TOs.*

2.76.18.7. Ensure adequate tie-down of trailers to railcars and blocking and bracing of explosives in the trailer. Cargo stability in transit is essential.

2.76.18.8. Apply safety rules in this chapter on explosives-laden motor vehicles and their operation.

2.76.18.9. The provisions of *Bureau of Explosives Pamphlet 6C* apply to explosives "Piggyback" operations (lists railcars and hitches approved for TOFC service).

2.76.18.10. Except for those just discussed, do not conduct operations on explosive items or explosives-laden containers, trailers, cars, etc., unless Q-D criteria is met.

★2.77. Movement of Explosives Shipments by Air. Air transportation of explosives by commercial aircraft is regulated by the DOT regulations that are incorporated into Title 49, CFR. Instructions about explosives-laden military aircraft (and certain DoD contract airlift operations) are in AFJI 11-204, *Operational Procedures for Aircraft Carrying Hazardous Material*, applicable aircraft TOs, and other parts of this manual. Transportation of impulse cartridges (HC/D 1.4 only) in aircraft travel pods or bomber aircraft equipment bays is permitted if these cartridges are packed correctly in the original DoT shipping containers. This procedure will be governed by OIs, to be approved by wing weapons safety. More hazardous explosives (such as aircraft flares) are not authorized by this manual for carriage in these travel pods.

2.78. Transportation of Explosives by Water. Transportation of explosives and other hazardous materials by water in vessels engaged in commercial service is regulated by the United States Coast Guard. Shipments overseas must be made according to the regulations of the carrier, the United States Coast Guard or the Department of the Army.

★Section F--Testing, Procedures Verification, Disassembling and Modifying Explosives Items.

★2.79. Guidance. This section gives precautions to be taken in testing, disassembling and modifying explosives items, and munitions technical order/aircraft loading verification.

2.80. Technical Personnel and Guidance. Allow only technically qualified personnel to disassemble, modify or test explosives. Supervisors must ensure necessary drawings, sketches, and operating instructions are available and followed. Dry run all new procedures with inert or simulated explosives devices. Handling new or test munitions requires certification. Use inert items when possible for munitions certification.

★2.81. Authorized Operations. Don't use live munitions items for verification, validation, or electrical testing of aircraft or other weapons systems. This does not prevent the conduct of "Built In Test" (BIT) checks or other low-current aircraft testing with live explosives installed, as long as doing so does not conflict with other USAF/DoD guidance. Modify, test, or disassemble explosives items only under the following circumstances:

2.81.1. When authorized by technical orders.

2.81.2. When MAJCOM and the AFMC item manager or System Program Office (SPO) grant approval.

2.81.3. When EOD personnel must disassemble to do emergency render safe operations or technical intelligence.

2.82. Protective Requirements. Use operational shields, remote controlled devices, fire protection systems, and ventilator systems for protection of personnel and property. Operations such as continuity checks of electrically actuated explosives devices, propellant cutting, explosives component assembly, modification, or disassembly and demilitarization may require proven operator protection. Protection afforded to personnel must be capable of limiting incident blast overpressure to 2.3 psi (K24), stopping fragments, and limiting thermal flux to 0.3 calories per square centimeter per second. The use of protective construction, such as laced reinforced concrete walls, distance, or both to achieve personnel protection must be approved as part of the site plan and final safety submission process described in Chapter 4. Design and test operational shields and remote control systems to give complete protection against all potential hazards (reference MIL-STD 398). ***NOTE:*** This paragraph does not apply to rod and gun club operations.

2.82.1. The TO managing agency (AFMC) must ensure safe design of specific protective devices when required by a TO. Test for a 25-percent overload and obtain approval from the Nonnuclear Munitions Safety Board.

2.82.2. When a using command establishes a requirement for protective devices, that command must ensure that they are of a safe design.

Section G--Command-Unique Explosives Items and Situations.

2.83. General Information. Storage and handling of some ammunition items are MAJCOM-unique and do not fit into any criteria contained in this manual. In such cases, request guidance in writing through command channels to AFSC/SEWV, describing the specific situation, explaining the ammunition item and how it will be stored and handled. The AFSC letter of approval may be incorporated into the MAJCOM supplement to this manual.

Chapter 3

APPLYING QUANTITY-DISTANCE (Q-D) CRITERIA

Section A--General Q-D Guidance

3.1. Introduction. The term "Quantity-Distance" or "Q-D" refers to protection requirements from Potential Explosive Sites (PES) to different kinds of exposed sites (ES). The Q-D standards were developed over many years and are based on explosives mishaps and tests.

★3.2. Types of Separations.

3.2.1. Inhabited Building Distance (IBD or IB). IB distance does not apply if the base or restrictive easement boundary is adjacent to land that is open and both manifestly unsuitable for habitation and for public gatherings. The commander designates personnel to perform a quarterly review of the area to ensure it remains open, uninhabited and unused. If any building construction, habitation or recreational activity occurs, reduce explosives limits to the maximum amount allowed by the distance to the new exposure. The commander, Facility Board, and facility user must be briefed and accept the need to reduce/eliminate NEW in the user's facility to prevent a violation should a new encumbrance occur before funding construction of the user's proposed facility. Apply IB separation to: (list is not all inclusive)

3.2.1.1. Buildings/operations involving people not related to munitions/explosives work.

3.2.1.2. Main power houses providing vital utilities to a major part of the installation.

3.2.1.3. Essential warehouses, shops and other facilities that must not be placed at risk because of their vital nature in supporting the mission.

3.2.1.4. Functions which would cause an immediate secondary hazard because of their failure to operate.

3.2.1.5. Joint DoD-Non DoD use runway.

3.2.1.6. Electrical transmission lines carrying 69KV or more, and the tower or poles supporting them, if the line in question is part of a grid system serving a large off-base area. This distance is based on blast overpressure only, fragment distances will not be used.

3.2.1.7. EOD facilities (offices, classrooms, shops).

3.2.1.8. For high density public traffic routes. These routes are considered "high density" if they have 10,000 or more car and/or rail passengers per day, or 2,000 or more ship passengers per day . When making an estimate of traffic density, use the default value of two passengers per car. Traffic density shall be averaged over a normal (non-holiday) week in terms of the passengers during a 24-hour period. No specific minimum separation is required to roadways on DoD installations which restrict public access.

★3.2.1.9. Manned and unmanned ground control approach (GCA), radar approach control (RAPCON) facilities and air traffic control towers that support a joint use airfield. (From all PES.)

3.2.1.10. Flight-line passenger terminals.

3.2.1.11. Structures such as concession stands or bleachers at open recreational sites.

3.2.1.12. Tanker aircraft.

★3.2.1.13. Manned GCA, RAPCON facilities and air traffic control towers, that support a military use only airfield, from a non-flight-line PES. (Use incremental IBD.)

3.2.2. Public Traffic Route (PTR) Distance. This is the minimum permissible distance between PESs and public highways or railroad lines. For HC/D 1.1 and 1.2, it is normally 60% of inhabited building distance. PTR and IB for HC/D 1.3 and 1.4 are the same. Apply PTR separation to: (list is not all inclusive)

3.2.2.1. Open passenger load and unload areas.

3.2.2.2. Joint DoD - Non DoD use taxiway. A taxiway serving both DoD and commercial aircraft. A taxiway serving solely DoD chartered, or Non-DoD aircraft on DoD authorized business is not joint use.

3.2.2.3. Open recreational facilities where structures are not involved (such as ball diamonds and volley ball courts) used for morale and health purposes at air bases and other operational military activities. When recreation facilities are solely for off-duty military personnel at their duty location, neither blast nor fragment Q-D apply. This total relaxation of Q-D requirements applies only when the PES and the ES are related closely as with a security alert force and explosives facilities for which they are responsible; it does not authorize the building of elaborate structures that substitute for properly sited recreational facilities or the collocation of unrelated military functions.

NOTE: When structures, such as concession stands or bleachers exists, apply IB criteria.

3.2.2.4. Military only training areas or other combatant-type exercises and similar fixed facilities (including small classrooms) designed for use by groups or classes.

3.2.2.5. Personnel exposed to explosives research, development and test operations that are conducted by remote control procedures. Fragment protection will also be provided for personnel involved in these type operations.

★3.2.2.6. Unmanned GCA and RAPCON facilities that support a military airfield (from unrelated PES). For manned or unmanned GCA and RAPCON facilities, supporting a military airfield, from a flightline PES, use Incremental PTR.

3.2.2.7. Medium traffic density. If routes have 400 or more, but less than 10,000 car and/or rail passengers per day, or 80 or more, but less than 2,000 ship passengers per day, then 60% of the specified minimum fragmentation distance for IB applies. Medium traffic density criteria apply, as a minimum, to recreational activity that is extensive and occurs on a regular basis. If routes have less than 400 car and/or rail passengers per day, or less than 80 ship passengers per day, then no minimum fragmentation distance is required. (This small number of passengers is considered low density.) Minimum distance shall be based on blast criteria (K24/K30) only. ***NOTE:*** Streets and roads on military (DoD) installations are not usually considered public highways unless they are used for through traffic other than that related to the work of the installation.

3.2.2.8. Incremental PTR distance will be used for electrical distribution lines (those carrying less than 69 KV) and the towers or poles supporting them, and unoccupied electrical substations.

3.2.2.9. Transmission lines (those carrying 69 KV or more) can be at PTR if loss of the line will not create serious social or economic hardships. Distance is based on blast overpressure only, fragment distance will not be used.

3.2.2.10. Aircraft battle damage repair training areas.

★3.2.3. Intraline (IL) Distance. IL distances provide the minimum amount of protection to activities associated with explosives. Applying IL recognizes the operational need for some people to be in the proximity of explosives while at the same time preserving some mission capability in the event of an explosives accident. Hardened facilities at this distance will be extensively damaged and its occupants may be severely injured. Service provided by this facility (excluding sensitive electronic equipment) should continue. In addition to the minimal protection to related activities, IL separation will prevent propagation between two explosives locations. At IL distance, no propagation from the blast overpressure is expected, and the probability of propagation from low angle, high velocity fragments is significantly reduced. Apply IL distance to: (See paragraph 3.13 for specific applications of IL)

3.2.3.1. Any two explosives operating locations.

3.2.3.2. Explosives operating buildings from explosives storage locations. See paragraph 2.32 for operations allowed at storage locations.

3.2.3.3. Activities that directly support the explosives operation or area.

3.2.3.4. Facilities of a tactical missile site where people are present.

3.2.3.5. Certain other facilities exclusively serving explosives areas or locations, see paragraph 3.13.

3.2.3.6. Construction activities exposed by explosives facilities or operations. This separation requirement applies to all construction activities whether being accomplished by civilian or military personnel.

3.2.4. Intermagazine (IM) Distance. This is the minimum distance between PESs to prevent one PES from simultaneously
3.2.3.7. See paragraph 3.13 for additional guidance.
3.2.4. Intermagazine (IM) distance. This is the minimum distance between PESs to prevent one PES from simultaneously detonating an adjacent PES. Maintaining IM is no guarantee that propagation from one PES to another will not occur, only that they will not simultaneously detonate. ***NOTE:*** An exception to this principle is earth covered magazines (ECM); maintaining IM between ECMs will not only prevent propagation, both simultaneous and delayed, but preserve the assets in the adjacent ECM.
3.2.4.1. IM separation depends on the type of magazine, orientation, hazard classification, and quantity of explosives stored. It is expected to prevent simultaneous detonation from blast overpressure from one magazine to another and offers reasonable protection against propagation from fragment impact. It does not protect magazines, except possibly earth-covered magazines, from severe structural damage. When less than required intermagazine separation exists between any two or more explosives storage locations, the quantities of explosives in these locations must be added to form a single PES encompassing the area and NEWs of the PESs which don't meet IM distance. For this reason, any separation between explosives locations less than IM distance may not be waived.
3.2.5. Minimum Distance. For some ammunition items, the IB, PTR, (and in some cases IL) distances may be reduced below specified minimums, based on primary fragment or firebrand hazards that are created. When this is the case, the minimum IB distance is specified by a number (indicating hundreds of feet) in parentheses as part of the hazard classification. Also, for items inside buildings, minimum building debris distances may apply, even if the primary fragment or firebrand distance is not prescribed. More detailed minimum distance guidance is given, by explosive hazard division, in paragraph 3.5.

3.3. Concurrent operations. When necessary to conduct more than one explosive operation within a single facility, the operations must be arranged to provide a minimum of intraline protection either by distance or equivalent protection. See paragraph 3.3.3. For example, a 12" reinforced concrete wall designed with a minimum compressive strength of 2500 psi provides equivalent intraline protection, providing the detonation from the amount of HC/D 1.1 explosives does not breach the wall. For breaching calculations, HC/D 1.2 will be treated as HC/D 1.1 when out of the packing container. When in its approved packing and shipping configuration the NEW of HC/D 1.2 items will be based on the NEW assigned to that national stock number.
3.3.1. The formula to determine the allowable Net Explosive Weight (W) for a known standoff distance (D) up to a maximum of 20 feet is: $W=9.88D^{.858}$ ***NOTE:*** The formula can not be used for distances beyond 20 feet.
3.3.2. The formula to determine Standoff Distance (D) for a known quantity of explosives (W) up to a maximum of 129 pounds is: $D=(W/9.88)^{1.1655}$ (Additional detail and explanation of how to apply this formula may be found in AFJMAN 32-1092 (AFM 88-22), *Structures to Resist the Effects of Accidental Explosions*)
3.3.3. Partial calculated criteria to prevent breaching (intraline protection) based on a 12 inch reinforced concrete wall with explosives 3 feet off of floor:

Table 3.1. Distance to Prevent Breaching (Intraline Protection).

Standoff distance (ft)	3	5	7	10	15	20
Maximum NEW(lbs)	25	39	52	71	100	129

3.3.4. Successive steps within a single explosives process or operation will be provided as much protection as practical, but do not require separation. Maximum facility limits must be observed. If the successive steps are housed in separate facilities provide IL separation between facilities.
3.3.5. A 12-inch reinforced concrete wall provides equivalent intraline protection for 5,000 pounds of HC/D 1.3 if packaged in its shipping/transportation configuration and 300 pounds of HC/D 1.3 if it is not packaged.
3.3.6. A 30-inch reinforced concrete wall provides intraline protection against the effects of an item containing not more than 50 pounds of high explosives when the nearest part of the item is at least 3 feet from the wall and 2 feet from the floor.
3.3.7. A 36-inch reinforced concrete wall provides adequate protection against the effects of an item containing not more than 70 pounds of high explosives. The same separation distance as stated in 3.3.6 above applies.
3.3.8. If an operation requires NEWs in excess of those that will prevent breaching of a wall, vacating the adjacent bay would provide equivalent IL protection as long as the weight stays under 200 pounds of high explosives.
3.3.9. (Added-AFRC) When mission requirements dictate, no more than two concurrent operations may be performed in a single bay if munitions involved in both operations are hazard class/division 1.4 items.

3.4. The Hazard Classification System.
3.4.1. The DoD hazard classification system is based on the system recommended for international use by the United Nations Organization. It consists of nine classes for dangerous goods. Most ammunition and explosives items are included in "Class 1, Explosives." Some items that contain a small amount of explosives and also one or more other hazardous materials may be assigned to a different class (2 through 9), based on the predominant hazard. Any item that contains explosives, but is

assigned to other than Class 1 due to the predominant hazard, is considered to have a net explosive weight of zero for Q-D determinations. Even though such items are assigned to other than Class 1, they will still have a DoD storage compatibility group designation, and may be combined in storage with compatible Class 1 items. They do not contribute to the explosive weight calculated for the storage site. When other than Class 1 ammunition items are stored alone, the storage site shall be treated as a warehouse (see paragraph 3.18).

3.4.2. A hazard classification is assigned for each ammunition and explosive item in the form and packaging in which it is normally stored and offered for transportation as cargo in commercial or military vehicles. These hazard classifications are listed in TO 11A-1-46, and in the DoD Joint Hazard Classification System listing.

3.4.2.1. Air Force organizations that develop, or first adopt for use, ammunition or explosive items are responsible for obtaining hazard classifications using the procedures in TO 11A-1-47. The hazard classification reflects the type and degree of hazard associated with the item and is used to determine the degree of protection (such as distance separation) needed for various exposed locations and people.

3.4.2.2. When ammunition or explosive items are not in the form and packaging in which they are normally stored and shipped, different hazard classifications may apply due to changes in spacing, orientation, confinement, and other factors. Sometimes testing of unpackaged components may be required in order to demonstrate the validity of classifications used for siting unpackaged ammunition, or conservative assumptions must be made about the potential severity of an accidental explosion. In many cases, these “unpackaged” or “in-process” hazard classifications will be established and approved as part of the site plan approval process described in Chapter 4.

3.4.2.3. For assistance in determining the hazard classification for an item, contact AFSC/SE.

3.5 Hazard Classes and Divisions. Class 1 is divided into six divisions which show the types of hazards expected:

3.5.1. Class/Division 1.1 (Mass-Detonating):

3.5.1.1. Items in this division are principally a blast hazard and may be expected to mass-detonate when a small portion is initiated by any means.

3.5.1.2. These explosions generally cause severe structural damage to adjacent objects. Propagation may occur so rapidly to explosives stored nearby which are unprotected from the initially exploding stack, that the quantities must be considered as a single source for Q-D purposes. The combined shock wave, in this case, is the same as a single detonation of a charge equal to the total of the stacks. (See simultaneous detonation in Attachment 1)

3.5.1.3. Items in class/division 1.1 include bulk high explosives, some propellants, mines, bombs, demolition charges, some missile warheads, some rockets, palletized projectiles loaded with TNT or Comp B, mass-detonating cluster bomb units (CBU), and ammunition components having mass-detonating characteristics.

3.5.1.4. Explosives and munitions in class/division 1.1 will also generally present a fragmentation hazard, either from the case of the explosive device or from the packaging or facility in which the explosives are stored. Unless otherwise specified, a minimum distance of 1250 feet will be used to separate class/division 1.1 explosives NEWs of 100 pounds or more from inhabited buildings. For NEWs less than 100 pounds the default minimum IB distance is 670 feet unless an item has an established fragment distance greater than 670’. See Table 3.22. Some munitions items have been tested and demonstrated to have less than the specified 1250 ft fragment hazard. In these instances, the minimum IB distance will be given in parentheses where the hazard classification is listed, such as (07) 1.1 for a 700-foot minimum IB distance.

3.5.2. Class/Division 1.2 (Nonmass-Detonating, Fragment-Producing):

3.5.2.1. These are items whose principal hazard is fragments, but will also have an associated blast hazard. The hazards may be either individual or in combination, depending on the item's storage/transportation configuration, type of packing, and quantity. Minimum separation distances, based on the range of hazardous fragments, must be used for IB, PTR and IL distances. Because most of the hazardous fragments will fall within a minimum distance, which is determined during hazard classification testing, fragment distance categories are established for class/division 1.2. These distances are expressed as parenthetical numbers in hundreds of feet preceding the hazard class/division for items posing increased hazard due to high energy fragments, debris, or firebrands.

3.5.2.2. Although the fragment distance varies for items within a category, the distance is essentially the same for one as for several items. For these items, the distance varies according to packing, state of assembly, charge-weight ratio, and caliber. These items may explode or detonate progressively when initiated.

3.5.3. Class/Division 1.3 (Mass Fire). These items burn vigorously, and the fires are difficult to put out. Explosions are usually pressure ruptures of containers, which may produce fragments (especially missile motors), but will not produce propagating shock waves or damaging blast overpressure beyond intermagazine distance. A severe hazard of the spread of fire may result from tossing about of burning container materials, propellant, firebrands, or other debris. Depending on the amounts of burning explosive materials, their downwind toxic effects usually do not extend beyond IB distances.

3.5.4. Class/Division 1.4 (Moderate Fire, No Blast). These items present a fire hazard but no blast hazard. There is virtually no fragmentation or toxic hazard beyond the fire hazard clearance required.

3.5.5. Class/Division 1.5 (Very Insensitive Explosive Substances). This division comprises substances that have a mass explosion hazard but are so insensitive that there is very little probability of initiation or of transition from burning to

detonation under normal conditions of transport or storage.

3.5.6. Class/Division 1.6 (Extremely Insensitive Explosive Articles). This division comprises articles that contain only extremely insensitive detonating substances and that demonstrate a negligible probability of accidental ignition or propagation.

Section B--Q-D Application

3.6. General Information. Q-D separations are an acceptable level of damage between a PES and an ES. Q-D principles are based on factors that include:

3.6.1. The construction and type of PES.

3.6.2. The explosives content of the PES.

3.6.3. The construction of the ES.

3.6.4. The distance separating the PES from the ES.

3.6.5. Orientation of the PES and the ES in the case of igloos and modules.

3.7. Determining Explosives Content of Items. The net explosive weight (NEW) or the high explosives equivalency of a specific explosive, explosive item, component or assembled weapon can be found in TO 11A-1-46.

3.8. Determining the Explosives Content of a PES. The combined bulk explosives weights of munitions items is not necessarily the weight used for Q-D calculations. Q-D is based on the maximum credible event (MCE), or the worst case explosion that is expected to occur. Follow these steps: (see paragraph 3.34 for tactical missiles).

3.8.1. Determine the explosives weight of each type of munition involved and the total NEW of each explosives HC/D.

3.8.2. When all items stored in a single building or location are of the same HC/D, use the applicable column of Table 3.3 for that HC/D.

3.8.3. When combining mass-detonating and nonmass-detonating ammunition and explosives (excluding HC/D 1.4), consider the distance for the total quantity (or TNT equivalency) of HC/D 1.1, 1.2 and 1.3 first as HC/D 1.1 then as 1.2 and finally 1.3. The required distance is the greater of the three. HQ AFSC/SE grants exceptions to this policy when analyses or test results demonstrate that the class division 1.1 (for liquid propellants) or 1.2 will not cause detonation of the class division 1.3 explosives. Several 1.2 munitions require greater separation, check the parenthetical IB values associated with 1.2 items.

3.8.4. For combinations of nonmass-detonating ammunition and explosives of different HC/Ds 1.2, 1.3 and 1.4, determine the required separation for each HC/D according to Table 3.3. Use the greatest separation of those determined.

3.8.5. Very insensitive detonating substances (VIDS) (HC/D 1.5) are stored as though they were class division 1.1.

3.8.6. For extremely insensitive detonating substances (EIDS) (HC/D 1.6) refer to Table 3.10. When HC/D 1.6 munitions are located with other HC/Ds, the following rules apply:

3.8.6.1. Consider HC/D 1.6 as HC/D 1.1 when stored with HC/D 1.1 or HC/D 1 .5.

3.8.6.2. Consider HC/D 1.6 as HC/D 1.2 when stored with HC/D 1.2.

3.8.6.3. Consider HC/D 1.6 as 1.3 when stored with HC/D 1.3.

3.8.7. The Department of Defense Explosives Safety Board (DDESB) assigns EIDS loaded ammunition or fuzes to either HC/D 1.2, 1.3, 1.4 or 1.6 depending on design and configuration. See TO 11A-1-46 for the assigned classification. Nuclear weapons with EIDS have been certified for classification as 1.4 (except in the United Kingdom where HC/D 1.2 must be applied) with compatibility Group N. If dissimilar Group N munitions are mixed together and have not been tested to assure non-propagation, the mixed munitions are considered to be 1.2D. When EIDS ammunition is stored with compatible items of other HC/Ds, the most restrictive HC/D present applies to the combination.

3.8.8. When reasonable efforts fail to obtain information on the explosives contents of host nation facilities that may be hazarding US Air Force facilities and personnel, the responsible weapons safety staff estimates the type and quantity of explosives. Base estimate on knowledge of the host nation's military mission and type of facility involved (i.e., igloo, HAS, maintenance facility, above ground magazine, etc.). As a general rule, estimate the maximum explosives contents shown in paragraph 3.11.3 using US Air Force standards, (i.e., the type of facility, distances and explosives involved). If a violation of US criteria to US targets is possible based on this analysis, obtain a waiver or exemption as outlined in chap 5.

3.9. Exposed Sites. Most common exposed sites are defined in Attachment 1 and listed in Table 3.3.

3.10. Measuring Distance.

3.10.1. Measure the distance to or from the outside of the nearest wall of the structure or room containing explosives.

3.10.2. When a structure is subdivided so that mass detonation between compartments will not occur, measure from the outside of the nearest wall of the compartment containing the greatest quantity distance hazard.

3.10.3. Take measurements for open storage, such as modules and revetments, from stack face to stack face.

3.10.4. Where explosives are outdoors, in a vehicle or on aircraft parked in the open or in unhardened protective shelters, measure distances to the explosives.

3.10.5. In hardened aircraft shelters (HAS), measure distances from the external wall of the shelter or stall containing the explosives or explosives-loaded aircraft.

3.10.6. Measure distance from the center of large missile silos, launchers or launch pads.

3.10.7. Measure from the munition, unless it is in a HAS, then from the edge of the HAS, to the nearest point of a nonexplosives location, building, aircraft or taxiway.

3.10.8. Measure to the centerline of the runway.

3.10.9. Measure to the nearest edge of open recreational areas. For golf courses, measure to the nearest edge of the tee or green or to the centerline of the fairway.

3.10.10. Determine front, rear and side exposures to and from igloos and a HAS according to Figure 3.4.

3.10.11. Measure separation distances along a straight line except as noted in paragraph 3.10.13.

3.10.12. Express all distances in feet.

3.10.13. For large intervening topographical features such as hills, measure distance over or around the feature, whichever is shortest.

3.10.14. Measure from the edge of pads around operating locations if munitions will be positioned on these pads.

3.11. Determining Q-D Separations. Table 3.3 shows the Q-D criteria for each HC/D, type of PES, and type of ES. Separation criteria generally fall into two categories:

3.11.1. K-Factors. Net explosives weight is used to calculate Q-D separations by means of the formula: $D=KW^{1/3}$

Where: D = required distance (in feet),

K = protection factor depending on the degree of risk assumed or permitted

$W^{1/3}$ = cube root of the net explosives weight (in pounds)

Distance requirements are sometimes expressed by the value of K, using the terminology K9, K11, K18, to mean K equals 9, K equals 11, K equals 18, etc. When the criteria are expressed as a K-factor, go to the applicable column of Table 3.6 to find the required separation corresponding to the explosives content of the PES under consideration. For an existing PES, the maximum explosives content allowed is determined by the actual distance to the ES, as shown in the applicable column of Table 3.6.

3.11.2. Minimum Distances. While K-factor criteria provide protection against blast, minimum distances, when shown in Table 3.3, are based on fragment distances (paragraph 3.2.5.) and provide protection from most hazardous fragments. As such, these distances cannot be reduced, except for some specific exceptions listed in the notes to Table 3.3 and in paragraphs 3.32 through 3.39. Minimum distances fall into two categories:

★3.11.2.1. General distances for HC/D 1.1. Where specific item testing or analogy has not established a fragment distance for a HC/D1.1 item, or when structure debris is involved, a 1250 foot minimum IB distance is required in most cases. (See Table 3.22 for exceptions.)

3.11.2.2. Specific minimum distances for all HC/D 1.2 and some HC/D 1.1 and 1.3 explosives. Based on testing or analogy, fragment distances have been determined for some specific stocklisted items. Specific minimum distances, when known, are shown in hundreds of feet by a numerical Figure (in parentheses) to the left of the HC/D designator. For example, (07)1.1 would indicate a HC/D 1.1 item with a 700-foot-minimum IB distance. Minimum PTR distance (paragraph 3.2.2.) would be 60 percent of 700 feet, or 420 feet.

★***NOTE:*** These are minimum distances for HC/D 1.1 items stored or used in an open area. For large quantities of hazard HC/D 1.1 items, consider the total NEW content of the PES since the overpressure may require a greater separation. Large quantities exist when the maximum credible event exceeds the following limits:

a. (04) 1.1--1,000 lbs
b. (05) 1.1--1,953 lbs
c. (07) 1.1--5,359 lbs
d. (08) 1.1--8,000 lbs
e. (12) 1.1--27,000 lbs
f. (14) 1.1--42,875 lbs
g. (18) 1.1--91,125 lbs

3.11.2.3. The quantity of explosives allowed in each PES is the most restrictive amount based on analyzing the nearest IM, IL, PTR, IB or other exposed site (ES) using the criteria in Table 3.3. Where the intersecting block in Table 3.3 shows one or more K-factors and minimum distances, the required separation is the greater of those calculated by K-factor or minimum distances. Where there are two or more adjacent ESs, the quantity allowed at the PES is the smallest of the amounts permitted by considering each ES in turn. Use the criteria in Table 3.3.

3.11.2.4. Where explosives are located in a common facility or location and are further subdivided into groups by intermagazine distance or equivalent protection, the subdivision requiring the greatest distances apply. Where IM or equivalent protection is not provided, use the total NEW of all explosives.

3.11.3. Regardless of actual separations, maximum quantity limitations for certain hazard HC/Ds and type of PES, are as follows:

Table 3.2. Maximum HC/D 1.1 Explosives Allowed.

Type PES	NEW (lbs)
Igloo (7-Bar, 3-Bar & Undefined), (7-Bar Navy box type A&B) and Aboveground Magazines	500K
Igloo (7-Bar Navy box type C, D, E &F)	350K
Nonstandard igloo (See Note) and Modules at K1.1	250K
Aircraft shelters	11K
Ready service storage facilities	22K

NOTE: Non-Standard igloos with presently approved sitings for explosives weights not exceeding 250,000 pounds remain valid. Future sitings must reflect the appropriate criteria in Table 3.3.

3.11.4. TO 11N-20-7, *Nuclear Safety Criteria*, provides limiting factors for nuclear weapons and when more restrictive, override Q-D criteria in this manual.

3.11.5. If Q-D criteria don't apply to a specific weapon system or a given situation, contact HQ AFSC/SE for separate instructions. Such cases may include unusual circumstances, configurations, protection or hazards.

★3.11.6. Separate the following hardened facilities at reduced intraline (related facility) distance based upon their degree of hardening. Locate no closer than 300 feet from any PES HAS (except 3rd generation) sited for more than 500 NEW. Locate no closer to 3rd generation PES HAS than the minimum distances in note 62 to Table 3.3.

3.11.6.1. Liquid Oxygen (LOX) Storage Facility - K9 The Q-D for hardened LOX generation facilities is the same as the Q-D for hardened LOX storage tanks.

3.11.6.2. POL Truck Shelters - K9

3.11.6.3. Chemical Biological Radiological (CBR) Collective Protection Facility - K7

3.11.6.4. Hardened Squadron Operations Facility--K7

3.11.6.5. Response Force Tactical Facility (RFTF)--K9

★3.11.6.6. Survivable Collective Protection System (SCPS) with 5 feet of Earth Cover - K3. With less than 5 feet of earth cover (never less than three feet), - K5. SCPS built before 1 September 1988 at less than 300 feet do not require a waiver or exemption.

★Table 3.3. Quantity Distance Criteria.

HAZARD CLASS/DIVISION							Class/Division 1.1 (35)						
	COLUMN		1	2	3	4	5	6	7	8	9	10	
LINE	FROM: POTENTIAL EXPLOSION SITE (PES)		EARTH COVERED IGLOO (1)				ABOVE GROUND MAGAZINE	ABOVE GROUND MAGAZINE	BARRI-CADED MODULE	OPERATING LOCATION UNBARRI-	OPERATING LOCATION BARRI-	MISSILE BATTERY DEFENSIVE	LINE
	TO: EXPOSED SITE (ES)		SIDE (61)	REAR (61)	FRONT UNBARRI-CADED (39) (5)	FRONT BARRI-CADED (39) (5)	UNBARRI-CADED (2) (3) (5)	BARRI-CADED (2) (3) (5)	(38)	CADED (46) (5)	CADED (3) (46) (5)		
1		7 Bar	K1.25 (14)	K1.25 (14)	K2.75 (14)	K2.75(14)	K4.5	K4.5	K4.5	K4.5	K4.5	K4.5	1
	SIDE	3 Bar	K1.25 (14)	K1.25 (14)	K2.75 (14)	K2.75 (14)	K6	K6	K6	K6	K6	K6	
	EARTH	Undef	K1.25 (63)	K1.25 (63)	K4.5 (63)	K4.5 (63)	K6	K6	K6	K6	K6	K6	
	COVERED		K2 (64)	K2 (64)	K6 (64)	K6 (64)							
2	IGLOO (1)	7 Bar	K1.25 (14)	K1.25 (14)	K2	K2	K4.5	K4.5	K4.5	K4.5	K4.5	K4.5	2
	REAR	3 Bar	K1.25 (14)	K1.25 (14)	K2	K2	K6	K6	K6	K6	K6	K6	
		Undef	K1.25 (14)	K1.25 (14)	K2	K2	K6	K6	K6	K6	K6	K6	
3	FRONT UNBARRI	7 Bar	K2.75 (14)	K2	K6	K6	K6	K6	K6	K6	K6	K6	3
	-CADED	3 Bar	K4.5	K4.5	K9	K9	K9	K9	K6	K9	K9	K9	
	(5) (39)	Undef	K6	K6	K11	K11	K11	K11	K11	K11	K11	K11	
4	FRONT BARRI	7 Bar	K2.75 (14)	K2	K6	K6	K6	K6	K6	K6	K6	K6	4
	-CADED	3 Bar	K4.5	K4.5	K6	K6	K6	K6	K6	K6	K6	K6	
	(5)(39)	Undef	K6	K6	K6	K6	K6	K6	K6	K6	K6	K6	
5	ABOVE GROUND MAGAZINE UNBARRICADED (2)		K6	K6	K11	K11	K11	K6	K11	K11	K6	K11	5
6	ABOVE GROUND MAGAZINE BARRICADED (2) (3)(5)		K6	K6	K6	K6	K6	K6	K6	K6	K6	K6	6
7	BARRICADED MODULE (38)		K1.25 (14)	K1.25 (14)	K6	K6	K6	K6	K1.1 (4)	K6	K6	K6	7
8	OPERATING LOCATION UNBARRICADED		K18 (6)	K18 (6)	K18	K18 (6)	K18	K18 (6)	K18 (6)	K18	K18 (6)	K18	8
9	OPERATING LOCATION BARRICADED (3) (5)		K18 (6)	K18 (6)	K18 (6)	K18 (6)	K18 (6)	K18 (6)	K18 (6)	K18 (6)	K18 (6)	K18	9
10	COMBAT AIRCRAFT PARKING AREA (65)		K30	K30	K30	K30	K30	K30	K30	K30	K30	K11 (7) (23) (68)	10
11	AIRCRAFT EXPLOSIVES CARGO PARKINGAREA (32)		K6 (68)	K6 (68)	K11 (7) (68)	K11 (7)(68)	K11 (7) (68)	K11 (7)(68)	K11 (68)	K11 (7) (68)	K6 (68)	K11(7) (68) (23)	11
12	FLIGHTLINE MUNITIONS HOLDING AREA		K6	K6	K11 (7)	K11 (7)	K11 (7)	K11 (7)	K11	K11 (7)	K6	K11 (7)	12
13	HARDENED AIRCRAFT SHELTER (12) (37)		K5 (51)	K5 (51)	K8 (51)	K8 (51)	K8 (51)	K8 (51)	K8 (51)	K8 (51)	K8 (51)	K2.75 (50)	13
14	DEFENSIVE MISSILE BATTERY		K6	K6	K11	K11	K11	K6	K11	K11	K6	K11 (7)	14
	COLUMN		1	2	3	4	5	6	7	8	9	10	

Table 3.3. Continued.

Class/Division 1.1 (35)						Class/Division 1.2				Class/ Div 1.3	Class/ Div 1.4	
	11	12	13	14	15	16	17	18	19	20	21	
LINE	COMBAT AIRCRAFT PARKING AREA (37)(67)	AIRCRAFT EXPLOSIVE CARGO PARKING AREA (32)	FLIGHT-LINE MUNITIONS HOLDING AREA (30)	HARDENED AIRCRAFT SHELTER (EXCEPT 3RD GENERATION (12)(13)(37)(70)	HARDENED AIRCRAFT SHELTER 3RD GENERATION (12)(13)(37)(70)	ALL TYPES OF POTENTIAL EXPLOSION SITE (10) (11) (13) (57) [04]	[08]	[12]	[18]	ALL TYPES OF POTENTIAL EXPLOSION SITE (13)(55) (21)(31)	ALL TYPES OF POTENTIAL EXPLOSION SITE (13)(19) (20)	LINE
1	K4.5 K6 K6	K4.5 K6 K6	K4.5 K6 K6	K4.5 K6 K6	K4.5 K6 K6	100' MIN (26)	100' MIN (26)	100' MIN (26)	100' MIN (26)	(58)	100' MIN (26)	1
2	K4.5 K6 K6	K4.5 K6 K6	K4.5 K6 K6	K4.5 K6 K6	K4.5 K6 K6	100' MIN (26)	100' MIN (26)	100' MIN (26)	100' MIN (26)	(58)	100' MIN (26)	2
3	K6 K9 K11	K6 K9 K11	K6 K9 K11	K6 K9 K11	K6 K9 K11	200' MIN (26)	300' MIN (26)	300' MIN (26)	300' MIN (26)	(58)	100' MIN (26)	3
4	K6 K6 K6	K6 K6 K6	K6 K6 K6	K6 K6 K6	K6 K6 K6	200' MIN (26)	300' MIN (26)	300' MIN (26)	300' MIN (26)	(58)	100' MIN (26)	4
5	K11 (7)	K11 (7)	K11 (7)	K11 (8)	K11 (8)	200' MIN (16)	300' MIN (16)	300' MIN (16)	300' MIN (16)	(58)	100' MIN (26)	5
6	K6	K6	K6	K6	K6	200' MIN (16)	300' MIN (16)	300' MIN (16)	300' MIN (16)	(58)	100' MIN (26)	6
7	K6	K6	K6	K6	K6	200' MIN (16)	300' MIN (16)	300' MIN (16)	300' MIN (16)	(58)	100' MIN (26)	7
8	K18	K18 (6)	K18 (6)	K18 (6)	IL at Note 62	200' MIN	400' MIN	600' MIN	900' MIN	(58)	100' MIN (26)	8
9	K18	K18 (6)	K18 (6)	K18 (6)	IL at Note 62	200' MIN	400' MIN	600' MIN	900' MIN	(58)	100' MIN (26)	9
10	K11 (7)(22)(23) (68)	K11 (7)(23) (68)	K11 (7)(23) (68)	K11 (8)(23) (68)	K11 (8)(23) (68)	240' MIN (17)	480' MIN (17)	720' MIN (17)	1080' MIN (17)	(59)	100' MIN (26)	10
11	K11 (7) (68)	K11 (7) (68)	K11 (7) (68)	K11 (8) (68)	K11 (8) (68)	200' MIN (18)	300' MIN (18)	300' MIN (18)	300' MIN (18)	(58)(18)	100' MIN (29) (18)(26)	11
12	K11 (7)	K11 (7)	K11 (7)	K11 (7)	USE TABLE 3.13	200' MIN (15)	300' MIN (15)	300' MIN (15)	300' MIN (15)	(58)(15)	100' MIN (15)(26)	12
13	K2.75 (50)	K2.75 (50)	SEE PARA 3.20	SEE PARA 3.20	SEE PARA 3.20	200' MIN (17)	300' MIN (17)	300' MIN (17)	300' MIN (17)	(58(17)	100' MIN (17)	13
14	K11 (7)	K11 (7)	K11 (7)	K11 (8)	K11 (8)	200' MIN	300' MIN	300' MIN	300' MIN	(58)	100' MIN (26)	14
	11	12	13	14	15	16	17	18	19	20	21	

Table 3.3. Continued.

HAZARD CLASS/DIVISION			Class/Division 1.1 (35)										
	COLUMN		1	2	3	4	5	6	7	8	9	10	
LINE	FROM: POTENTIAL EXPLOSION SITE (PES)		EARTH COVERED IGLOO (1)				ABOVE GROUND MAGAZINE	ABOVE GROUND MAGAZINE	BARRI-CADED MODULE	OPERATING LOCATION UNBARRI-	OPERATING LOCATION BARRI-	MISSILE BATTERY DEFENSIVE	LINE
	TO: EXPOSED SITE (ES)		SIDE (61)	REAR (61)	FRONT UNBARRI-CADED (39) (5)	FRONT BARRI-CADED (39) (5)	UNBARRI-CADED (2) (3) (5)	BARRI-CADED (2) (3) (5)	(38)	CADED (46) (5)	CADED (3) (46) (5)		
15	AIRFIELD MILITARY USE	RUN-WAY	K18 (30)	K18 (30)	K30 (30) 750' MIN	K30 (30) 750" MIN	K30 750'MIN (30)	K30 750'MIN (30)	K30 750'MIN (30)	K30 750'MIN (30)	K30 750'MIN (30)	NONE REQUIRED	15
16	ONLY (66)	TAXI WAY	K18 (30)	K18 (30)	K21/30 (30) 750' MIN	K21/30 (30) 750'MIN	K24/30 750'MIN (30)	K24/30 750'MIN (30)	K24/30 750'MIN (30)	K24/30 750'MIN (30)	K24/30 750'MIN (30)	NONE REQUIRED	16
17	AIRFIELD, JOINT MILITARY/	RUN-WAY	K35/50 1250'MIN (47) (52)	K25/50 1250'MIN (47) (52)	K35/50 1250'MIN (47) (52)	K35/50 1250'MIN (47) (52)	K40/50 1250'MIN (47)	K40/50 1250'MIN (47)	K40/50 1250'MIN (47)	K40/50 1250'MIN (47)	K40/50 1250'MIN (47)	K40/50 1250'MIN (47)	17
18	NON MILITARY USE (66)	TAXI WAY	K21/30 750'MIN (48) (53)	K15/30 750'MIN (48) (53)	K21/30 750'MIN (48) (53)	K21/30 750'MIN (48) (53)	K24/30 750'MIN (48)	K24/30 750'MIN (48)	K24/30 750'MIN (48)	K24/30 750'MIN (48)	K24/30 750'MIN (48)	K24/30 750'MIN (48)	18
19	NON-EXPLOSIVES LOADED AIRCRAFT		K35/50 1250'MIN (42)(47)(52)	K25/50 1250'MIN (42)(47)(52)	K35/50 1250'MIN (42)(47)(52)	K35/50 1250'MIN (42)(47)(52)	K40/50 1250'MIN (42) (47)	K40/50 1250'MIN (42) (47)	K40/50 1250'MIN (42) (47)	K40/50 1250'MIN (42) (47)	K40/50 1250'MIN (42) (47)	K30 (43)	19
20	PASSENGER LOAD/UNLOAD AREA (45)		K21/30 750'MIN (48) (53)	K15/30 750'MIN (48) (53)	K21/30 750'MIN (48) (53)	K21/30 750'MIN (48) (53)	K24/30 750'MIN (48)	K24/30 750'MIN (48)	K24/30 750'MIN (48)	K24/30 750'MIN (48)	K24/30 750'MIN (48)	K30 (48)	20
21	FACILITIES FOR COMBAT AIRCRAFT ALERT FORCES (49)		K18	K18	K18	K18	K18	K18	K18	K18	K18	K18	21
22	ABOVE GROUND UTILITIES, EXCEPT POWER LINES (6) (24)		K21/30 750'MIN (48) (53)	K15/30 750'MIN (48) (53)	K21/30 750'MIN (48) (53)	K21/30 750'MIN (48) (53)	K24/30 750'MIN (48)	K24/30 750'MIN (48)	K24/30 750'MIN (48)	K24/30 750'MIN (25) (48)	K24/30 750'MIN (25) (48)	K24/30	22
23	UNDERGROUND UTILITIES & BULK POL FACILITIES OVER 500 GALLON (24)(44)		K3 80'MIN	K3 80'MIN	K3 80'MIN	K3 80'MIN	K3 80'MIN	K3 80'MIN	K3 80'MIN	K3 80'MIN	K3 80'MIN	K3 80'MIN	23
24	ABOVE GROUND BULK POL FACILITIES OVER 500 GALLONS. (44)		K35/50 1250'MIN (47) (54)	K25/50 1250'MIN (47) (54)	K35/50 1250'MIN (47) (54)	K35/50 1250'MIN (47) (54)	K40/50 1250'MIN (47)	K40/50 1250'MIN (47)	K40/50 1250'MIN (47)	K40/50 1250'MIN (47)	K40/50 1250'MIN (47)	K40/50 (47)	24
25	PUBLIC TRAFFIC ROUTE (9)		K21/30 750'MIN (48) (53)	K15/30 750'MIN (48) (53)	K21/30 750'MIN (48) (53)	K21/30 750'MIN (48) (53)	K24/30 750'MIN (48)	K24/30 750'MIN (48)	K24/30 750'MIN (48)	K24/30 750'MIN (48)	K24/30 750'MIN (48)	K24/30 750'MIN (48)	25
26	RECREATION AREA/ FACILITY (34)		K35/50 1250'MIN (47) (52)	K25/50 1250'MIN (52)	K35/50 1250'MIN (47) (52)	K35/50 1250'MIN (47) (52)	K40/50 1250'MIN (47)	K40/50 1250'MIN (47)	K40/50 1250'MIN (47)	K40/50 1250'MIN (47)	K40/50 1250'MIN (47)	K40/50 1250'MIN (47)	26
27	RELATED FACILITY (36)		K18 (6) (41)	K18 (6) (41)	K18 (6) (41)	K18 (6) (41)	K18 (6) (41)	K18 (6) (41)	K18 (6) (41)	K18 (6) (41)	K18 (6) (41)	K18 (6) (41)	27
28	INHABITED BUILDING (60) (33)		K35/50 1250'MIN (47) (52)	K25/50 1250'MIN (47) (52)	K35/50 1250'MIN (47) (52)	K35/50 1250'MIN (47) (52)	K40/50 1250'MIN (47)	K40/50 1250'MIN (47)	K40/50 1250'MIN (47)	K40/50 1250'MIN (47)	K40/50 1250'MIN (47)	K40/50 1250'MIN (47)	28
	COLUMN		1	2	3	4	5	6	7	8	9	10	

Table 3.3. Continued.

	Class/Division 1.1 (35)					Class/Division 1.2				Class/ Div 1.3	Class/ Div 1.4	
	11	12	13	14	15	16	17	18	19	20	21	
LINE	COMBAT AIRCRAFT PARKING AREA (37)(67)	AIRCRAFT EXPLOSIVE CARGO PARKING AREA (32)	FLIGHT-LINE MUNITIONS HOLDING AREA (30)	HARDENED AIRCRAFT SHELTER (EXCEPT 3RD GENERATION (12)(13)(37)(70)	HARDENED AIRCRAFT SHELTER 3RD GENERATION (12)(13)(37)(70)	ALL TYPES OF POTENTIAL EXPLOSION SITE (10) (11) (13) (57) [04]	[08]	[12]	[18]	ALL TYPES OF POTENTIAL EXPLOSION SITE (13)(55) (21)(31)	ALL TYPES OF POTENTIAL EXPLOSION SITE (13)(19) (20)	LINE
15	NONE REQUIRED (56)	NONE REQUIRED (56)	NONE REQUIRED (56)	NONE REQUIRED (56)	NONE REQUIRED (56)	240' MIN (17)(30) (18)	480' MIN (17)(30) (18)	720' MIN (17)(30) (18)	1080' MIN (17)(30) (18)	(17)(30) (59)	100' MIN (17)	15
16	NONE REQUIRED (56)	NONE REQUIRED (56)	NONE REQUIRED (56)	NONE REQUIRED (56)	NONE REQUIRED (56)(12)	240' MIN(27) (17)(30) (18)	480' MIN(27) (17)(30) (18)	720' MIN(27) (17)(30) (18)	1080' MIN(27) (17)(30) (18)	(17)(30) (59)	100' MIN (17)	16
17	K40/50 1250'MIN (47)	K40/50 1250'MIN (47)	K40/50 1250'MIN (47)	K40 REAR K62 SIDE K50 FRONT (40)	IB at Note 62	400' MIN	800' MIN	1200' MIN	1800' MIN	(59)	100' MIN	17
18	K24/30 750'MIN (27)(48)	K24/30 750'MIN (27)(48)	K24/30 750'MIN (48)	K24/30 REAR K37 SIDE K30 FRT(27) (40)	PTR at Note 62 (27)	240' MIN (27)	480' MIN (27)	720' MIN (27)	1080' MIN (27)	(27) (59)	100' MIN (27)	18
19	K40/50 1250'MIN (43)(47)	K40/50 1250'MIN (43)(47)	K40/50 1250'MIN (43)(47)	K40 REAR K62 SIDE K50 FRONT (40)	IB at Note 62	400' MIN (43)	800' MIN (43)	1200' MIN (43)	1800' MIN (43)	(43) (59)	100' MIN (43)	19
20	K24/30 750'MIN (48)	K24/30 750'MIN (48)	K24/30 750'MIN (48)	K24/30 REAR K37 SIDE K30 FRT (40)	PTR at Note 62	240' MIN	480' MIN	720' MIN	1080' MIN	(59)	100' MIN	20
21	K18 (6)	K18 (6)	K18 (6)	K18 (6)	IL at Note 62	200' MIN	400' MIN	600' MIN	900' MIN	(58)	100' MIN (26)	21
22	K24/30 750'MIN (25)(48)	K24/30 750'MIN (25)(48)	K24/30 750'MIN (25)(48)	K24/30 REAR K37 SIDE K30 FRT (25)(40)	PTR at Note 62	240' MIN	480' MIN	720' MIN	1080' MIN	(59)	100' MIN	22
23	K3 80' MIN	K3 80' MIN	K3 80' MIN	K3 80' MIN	K3 80' MIN	80' MIN (69)	80' MIN (69)	80' MIN (69)	80' MIN (69)	80' MIN (69)	80' MIN (26)(69)	23
24	K40/50 1250'MIN (47)	K40/50 1250'MIN (47)	K40/50 1250'MIN (47)	K40 REAR K62 SIDE K50 FRONT (40)	IB at Note 62	300' MIN	800' MIN	800' MIN	800' MIN	100' MIN (29)(59)	100' MIN (28)	24
25	K24/30 750'MIN (48)	K24/30 750'MIN (48)	K24/30 750'MIN (48)	K24/30 REAR K37 SIDE K30 FRT (40)	PTR at Note 62	240' MIN	480' MIN	720' MIN	1080' MIN	(59)	100' MIN	25
26	K40/50 1250'MIN (47)	K40/50 1250'MIN (47)	K40/50 1250'MIN (47)	K40 REAR K62 SIDE K50 FRONT (40)	IB at Note 62	400' MIN	800' MIN	1200' MIN	1800' MIN	(59)	100' MIN	26
27	K18 (6) (41)	K18 (6) (41)	K18 (6) (41)	K18 (6) (40) (41)	IL at Note 62	200' MIN (17)	400' MIN	600' MIN	900' MIN	(58)	100' MIN (26)	27
28	K40/50 1250'MIN (47)	K40/50 1250'MIN (47)	K40/50 1250'MIN (47)	K40 REAR K62 SIDE K50 FRONT (40)	IB at Note 62	400' MIN	800' MIN	1200' MIN	1800' MIN	(59)	100' MIN	28
	11	12	13	14	15	16	17	18	19	20	21	

NOTES:

1. To use this criteria earth-covered igloos (existing or new construction) must meet the requirements of paragraph 3.2 and the definition of "earth-covered magazine" in Attachment 1. Non standard igloos with presently approved sitings for explosives weights not exceeding 250,000 pounds remain valid. (See Paragraph 1.2.3.) Future sitings must reflect the appropriate criteria.

2. Includes open air munition stocks, light structures (for example, some Butler buildings), and trucks, trailers or railcars loaded with explosives. See paragraph 2.74.15 for vehicle inspection point criteria. Also includes modules, see paragraphs 3.22 through 3.24.

★3. Barricades must meet the requirements of paragraph 3.12. For igloos the barricades in front of these structures will count for Q-D purposes only when the facility is being looked at as an ES; for these facilities, no credit is given for a front barricaded PES.

4. K1.1 is the minimum separation permitted between stacks of explosives in adjacent barricaded cells within a module and between adjacent barricaded modules. Cells containing structures heavier than metal Butler-type buildings require K6 barricaded and K11 unbarricaded to all other cells containing HC/D 1.1 explosives.

5. For barricading consideration see paragraph 3.12.8 magazines as Barricaded Structures

★6. Continue to use K9 to properly barricaded facilities sited at K9 before 1 June 1980 until a revised siting of that facility is necessary, except as noted below. K18 separations, or reduced intraline distances from earth-covered igloos in Table 3.7 are required for new or revised sitings. Barricades should continue to be used in designing new facilities to limit fragment damage. Continue to use K9 for the following properly barricaded facilities.

a. Hardened response force tactical facilities (RFTF). No barricade is required to use K9 for RFTFs.

b. Facilities of a tactical missile site. (From the missiles of the Tactical Missile Site to its manned facilities. Also applies to Defensive Missile Batteries.)

c. Field operations in magazine areas when performing minor maintenance, packaging or surveillance inspections from adjacent magazines..

d. Unoccupied auxiliary power facilities, transformer stations, water treatment and pollution abatement facilities and other utilities that serve the PES and are not an integral function in the PES. Loss must not create an immediate secondary hazard. These applications need not be barricaded. See paragraph 3.13 for exceptions involving facilities solely supporting explosives storage areas.

★7. Use K6 if the ES is protected by a barricade meeting the requirements of paragraph 3.12.

★8. Use K11 where no shelter wall, revetment wall or barricade protects the ES from the PES. Use K6 where a shelter wall, revetment wall or barricade protects the ES from the PES.

9. See paragraph 3.2.2 for additional exposures requiring PTR separation.

10. When necessary, fill earth-covered igloos to their physical capacity for HC/D 1.2(04) or (08)and 500,000 lbs for subdivisions (12) or (18) explosives, provided the igloos are properly sited for at least 200 pounds of HC/D 1.1 material. This provision applies only to IM between earth-covered igloos. In no case will the required IB, PTR, or IL distances be less than the minimum specified when a subdivision of HC/D 1.2 is being stored. For example: 1800 feet for 1.2(18). See note 13 for an exception to IB, PTR, and IL distance for 1.2(04) CBUs in a HAS.

11. Items in this division present a risk of propagation to adjacent aboveground magazines, particularly when packed in combustible containers. Distances shown are not to be reduced by the presence of barricades or earth cover. Storage in earth-covered igloos is preferred.

12. Separations are based on shelter doors remaining closed, except for aircraft towing, fueling, servicing, run up, or taxi and during integrated combat turnarounds or short periods when maintenance equipment or munitions are being moved into or out of shelters. If doors are left open for extended periods, normal combat aircraft parking area criteria apply out the front.

13. Two aircraft loads of class division 1.2 (all subdivisions), 1.3, or 1.4 explosives don't require separation in HAS except out the front.

14. When required in austere areas (paragraph 3.21), reduce K1.25 to K1.1; reduce K2.75 to K2.5 when limiting igloo contents to those items listed in paragraph 3.23.2.

★15. If PES is a combat aircraft parking area or HAS no separation is necessary.

16. See paragraph 3.24. for reduced separations for austere area storage of nonmass-detonating CBUs and 20 and 30 mm ammunition.

★17. If PES is a combat aircraft parking area, flightline munitions holding area, HAS, or explosives loaded cargo aircraft parking area no separation is necessary. If PES is a defensive missile battery use IM separation. (See paragraph 3.25.4.)

★18. If PES is an aircraft explosive cargo parking area, HAS, or combat aircraft parking area no separation is necessary.

★19. Magazines storing only HC/D 1.4 items may be sited at 50 feet (100 feet if combustible construction) from all other magazines or explosives operating locations regardless of the HC/D or quantity of explosives authorized in the adjacent structures. The responsible commander must accept the fact that an explosion in adjacent structures could result in loss of the HC/D 1.4 stocks. Earth-covered structures may be filled to physical capacity with HC/D 1.4 explosives without requirement for separation to other facilities. However, DoD requires fire protection distance from igloos storing HC/D 1.4 with the only

exception being to other igloos.

20. When required for operational necessity, store limited quantities of HC/D 1.4 items without regard for Q-D. See paragraph 2.35 for licensing requirements.

21. For reasons of operational necessity, store only 100-pounds NEW or less of HC/D 1.3 items without regard for Q-D. See paragraph 2.35 for licensing requirements.

★22. When parking explosives-loaded combat aircraft at less than intermagazine distance between aircraft within a group, obtain approval from at least the MAJCOM/CV owning the exposed aircraft. if grouping is required for support of a Unified Commander, the Major Air Component Vice Commander having operational control of the aircraft will be the lowest approval. Use K18 between groups. Intervening barricades, although recommended, don't reduce the required separation between groups.

23. Use K30 for aircraft survivability.

★24. See definition of "Utilities" in Attachment 1. Paragraph 3.13 contains additional guidance on separations required for specific utilities. Refer to paragraph 2.48 for additional guidance on electrical utilities. Use paragraph 2.23 for storage of water for firefighting. Locate all unprotected water towers and above ground water tanks, whose loss is unacceptable, a minimum of inhabited building distance (IBD) from explosives locations. If loss of the water tower is acceptable, no Q-D is required. Locate tanks and reservoirs below ground level at underground POL separations.

★25. K24/30 is the minimum separation authorized to unrelated utilities. Use K40/50 where practical.

26. A 50-foot-separation distance may be used from a PES of noncombustible construction.

27. No Q-D separation is necessary between an explosives-loaded aircraft parking area and the taxiways exclusively serving or constructed as part of the area.

28. At least 50 feet from combat aircraft parking areas and aircraft explosives cargo parking areas. Use 100 foot minimum for all other PESs.

29. The 100-foot-minimum separation does not apply to combat aircraft parking areas and aircraft explosives cargo parking areas. All other requirements apply.

★30. When required at overseas locations only, use K4.5 for HC/D 1.1 PES's and 125 feet for nonmass-detonating PES's. In NATO, use the equation: D=1.8Q1/3, where D is the distance in meters and Q equals the NEW in kilograms. The use of these reduced separations depends on operational necessity, providing the commander accepts the transient risk to military aircraft movements. If siting facilities, the MAJCOM/CC or CV must provide HQ AFSC/SE a letter listing all bases at which these distances will apply and state acceptance of transient risk to military aircraft movements. Exceptions for off-base exposures, requiring SECAF approval, must obtain this approval before new constructions begins. Recertification for each site plan submitted is not necessary.

31. For intentional static firing for shelf life testing or similar operations see paragraph 3.27.3.

32. No Q-D separation is necessary from, "through" flight, explosives-loaded cargo aircraft when parked 24 hours or less for refueling, servicing, crew rest or change, or maintenance performed under TO 11A-1-33, Handling and Maintenance of Explosives Loaded Aircraft. Keep the aircraft under constant surveillance and do not load, unload, or handle explosives. Park these aircraft on the hot cargo pad. When this is not possible, park as remotely as practical from other explosives or populated areas. Comply with minimum airfield criteria in AFMAN 32-1013.

33. See paragraph 3.2.1 for additional exposures requiring IB separation.

34. Use PTR distances for recreational areas in the open, such as golf courses or tennis courts without structures. Use the listed separation where structures, including bleachers, are part of the facility (such as indoor tennis courts or golf clubhouses). No separation is necessary to recreational areas used exclusively by personnel supporting the PES, however, use IL separation from other related PES's.

35. For class division 1.5 items, use C/D 1.1 criteria.

36. See paragraph 3.13 for additional information and specific requirements.

★37. See paragraph 3.20 for additional information and specific requirements. Use combat aircraft parking area criteria for steel bin revetments and the unhardened front or rear of Korean TAB VEE or Flowthru shelters. See Table 3.12. For HC/Ds 1.2, 1.3, and 1.4, use intermagazine separation to protect HAS and maintenance HAS from unrelated PES (such as operating locations, igloos, and above ground magazines.)

38. Separations shown apply to side, rear, and barricaded front exposures. For exposures to or from the unbarricaded front of a module, use unbarricaded aboveground magazine criteria. K1.1 is the minimum separation authorized between stacks of munitions in adjacent cells and modules. See paragraph 3.22 for additional guidance concerning modules.

39. Consider the front of an igloo unbarricaded within 60 degrees from either side of the door centerline unless a barricade meeting the requirements of paragraph 3.12 protects the igloo.

40. Applies to all class/division 1.1 munitions except AIM-7, AIM-9, and AGM-65 missiles. See paragraph 3.20.5.3 for separation distances for these items. Only 50 feet separation is necessary from the sides or rear of the HAS (other than 3rd Generation) for 500 pounds NEW or less.

41. Use the minimum IL distance for specific items and situations in paragraph 3.39 (Table 3.22).

42. Criteria shown apply to nonmilitary aircraft. Use incremental K30 to military nonexplosives-loaded aircraft. MAJCOMs may require greater protection for unique mission or high value airframes.
★43. Q-D separations to nonexplosives military aircraft parking areas from combat aircraft parking areas, flightline munitions holding areas, and explosives cargo aircraft parking areas are a MAJCOM responsibility. Consider parked aero club aircraft as nonmilitary aircraft for Q-D purposes. Also refer to paragraph 3.13.3.1 for collocating combat operations.
43. (AFRC) Non-exposives loaded aircraft supprting mobility/contingency operations must be parked at no less than K-30 from combat aircraft pariking areas without prior coordination with AFRC/SEW.
★44. See paragraph 3.29.1 for special requirements and for separations from 500 gallons of POL or less. Consider cut and cover POL tanks as underground. For Q-D purposes, consider hydrazine H-70 facilities as POL. Site berm fuel bladders at incremental K40/50 distance with a minimum 400 feet from the PES supported. Q-D from igloos is K35/50 for fronts and sides and K25/50 for rears. (Fuel bladders must be fueled from trucks, underground lines or aboveground lines that have automatic shutoffs.)
45. Applies to open locations where passengers enplane or deplane. For structures where passengers assemble, such as terminal buildings, use IB distance.
46. See paragraph 3.14 for specific criteria for rocket storage, checkout and assembly buildings.
47. Use the minimum IB distance for specific items and situations (paragraphs 3.32 through 3.39) or authorized under paragraph 3.11 in place of the 1250-foot-minimum distance.
48. Use the minimum PTR distance for specific items and situations (paragraphs 3.32 through 3.39) or authorized under paragraph 3.11 in place of the 750-foot-minimum distance.
49. Alert force facilities which house alert crews and essential support personnel for alert aircraft, may be sited at less than K18 provided adequate fragment protection is provided by substantial dividing walls and blast doors. Use greater separation where response time will permit. Other aircraft crews and support personnel must meet the requirements of Table 3.3.
★50. Use K6 barricaded and K9 unbarricaded to the front of a TAB VEE or TAB VEE Modified. K2.75 protects against simultaneous detonation. Use K8 to maintenance HAS or for aircraft and shelter survival . However, survival criteria to the front of a TAB VEE or modified TAB VEE is K18.
★51. All munitions storage area PESs to TAB VEE fronts will apply K 18 if serviceability status of the doors allows them to be closed when aircraft are inside. Otherwise, apply K30 criteria to TAB VEE fronts.
52. K-factors shown apply to 26- by 60-foot or larger igloos. For smaller igloos, use K40/50.
53. K-factors shown apply to 26- by 60-foot or larger igloos. For smaller igloos, use K24/30.
54. K-factors shown apply to 26- by 60-foot or larger igloos. For smaller igloos, use K40.
55. When necessary, fill earth-covered igloos to their physical capacity for HC/D 1.3, provided the igloos are properly sited for at least 200 pounds of HC/D 1.1 material.
56. No explosives safety separation required. Apply airfield safety criteria. See paragraph 3.25 and AFI 32-1026, Planning and Design of Airfields (formerly AFR 86-14).
57. Use Table 3.8, Hazard Class Division 1.2 Quantity-Distances
58. Use Table 3.9, IM and IL column.
59. Use Table 3.9, PTR and IB column.
60. For sparsely populated locations, reduce the minimum 1250-foot fragment distance to 900 feet [270 meters (m)] if the PES does not exceed 11,400 pounds (5140 kg). Allow no more than 25 persons in any sector bounded by the sides of a 45 degree angle, with the vertex at the PES, and the 900 feet (270 m) and 1250 feet (380 m) arcs from the PES. See Figure 3.1.
★61. When required, reduce specific distances for certain exposures. Testing proved there is attenuation of the airblast overpressures from the sides and rear of earth-covered igloos compared to an unconfined surface burst. Some slight overpressure increase occurs at the front. Compute intraline distances from earth-covered igloos from the following table or directly from Table 3.7. The provisions of this note do not apply when the ES is a military only taxiway or runway.

Table 3.4. Factors for Computing IL from Igloos.

Exposure	NEW Range (lbs.)	K-FACTOR Barricaded	K-FACTOR Unbarricaded
Front	1 - 300K	10	18
	300K - 500K	10 - 9	18
Side	1 - 300K	7	16
	300K - 400K	7 - 9	16 – 18
	Over 400K	9	18
Rear	1 - 100K	6	12
	100K - 300K	6	12 – 14
	300K - 400K	6-9	14 – 18
	Over 400	9	18

62. Use the following table to determine Q/D from a US Third-generation Hardened Aircraft Shelter PES to an Unhardened ES. See note 12 above. Munitions should be separated from the Hardened Aircraft Shelter walls at a distance sufficient to eliminate local breaching. For less than 1100 lbs, a 3 foot separation from the wall is sufficient.

Table 3.5. Quantity-Distance for 3rd Generation HAS to unhardened ES.

NEW (Pounds)	FRONT (IB/PTR/IL)	SIDES (IB/PTR/IL)	REAR (IB/PTR/IL)
0 - 5	50’	50’	50’
6 - 500	230’	50’	50’
501 - 1100	230’	395’	165’
1101-11000	IB=K50 PTR=K26 Min 300’ IL=K18 Min 300’	IB=K62 PTR=K32 Min 395’ IL=K22 Min 395’	IB=K40 PTR=K20 Min 300’ IL=K14 Min 300’

63. Use this K factor for NEW in PES up to 250,000 lbs.
64. Use this K factor for NEW in PES above 250,000 lbs.
65. The K factor indicated will provide protection from blast overpressure. Barricades are required if protection from low angle, high velocity fragments is desired.
66. Use Runway, Airfield Military Use Only, criteria for End of Runway and Dearm Crew shelters. See paragraph 3.13.4.
★67. Intraline is the minimum distance between separate groups of explosives loaded combat configured aircraft or between aircraft and a pre-load or site that serves to support aircraft. Authorized Integrated Combat Turn (ICT) operations using munitions are considered a Combat Aircraft Parking Area. ICT operations using only inert munitions or Hot Pit refueling conducted within an explosive safety clear zone are also considered a Combat Aircraft Parking Area. Site either according to procedures in Chapter 4, Section A.
68. The K factor indicated will provide IM protection only. K30 is required if blast overpressure protection is desired.
★69. An 80 foot minimum is advisory, but not mandatory, in the DoD standard.
★70. All hazard class/division (HC/D) 1.1 material, regardless of specific known fragment distances, will drive HAS inhabited building (IB) clear zones based on the specific HAS Q-D criteria and the maximum credible event (MCE) for the shelter. For example, 2500 lbs of HC/D (14)1.1 material in a 3rd Generation HAS would require K62 (841-feet) from the sides, K50 (679-feet) from the front, and K40 (543-feet) from the rear. This guidance is predicated on the mass detonating characteristics of HC/D 1.1 material and the demonstrated effects of a HC/D 1.1 event in a HAS.

Figure 3.1. Reduction For Sparsely Populated Locations.

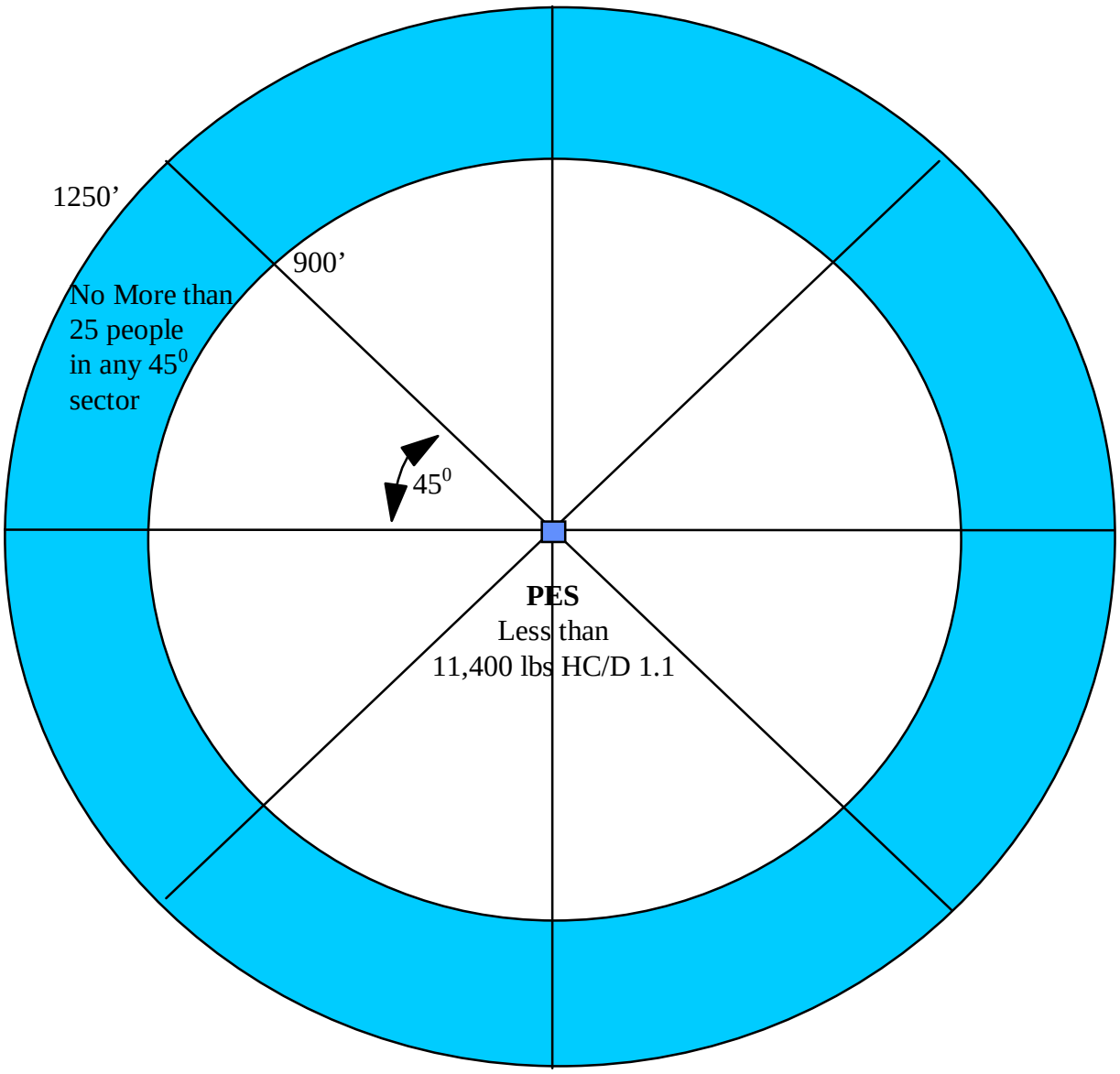

(See Table 3.3, Note 60)

Table 3.6. Quantity-Distance Separation Distance.

NET EXPLOSIVE WEIGHT (POUNDS)			DISTANCE FROM POTENTIAL EXPLOSION SITE TO EXPOSED SITE (FOR GIVEN K-FACTOR) (FEET)														
OVER	NOT OVER-	CUBE ROOT OF UPPER LIMIT	**K1.1**	**K1.25**	**K2**	**K2.5**	**K2.75**	**K3**	**K4**	**K4.5**	**K5**	**K6**	**K7**	**K8**	**K9**	**K11**	**K18**
			IM	IM	IM	IM	IM	POL	IM	IM	HAS	IM		HAS	IL	IM	IL
0	1	1.00	2	2	2	3	3	3	4	5	5	6	7	8	9	11	18
1	2	1.26	2	2	3	4	4	4	5	6	6	8	9	10	12	14	23
2	5	1.71	2	3	4	5	5	5	7	8	9	11	12	14	16	19	31
5	10	2.15	3	3	5	6	6	6	9	10	11	13	15	17	20	24	39
10	20	2.71	3	4	6	7	8	8	11	12	14	17	19	22	25	30	49
20	30	3.11	4	4	7	8	9	9	12	14	16	19	22	25	28	35	56
30	40	3.42	4	5	7	9	10	10	14	15	17	21	24	27	31	38	62
40	50	3.68	5	5	8	10	11	11	15	17	18	23	26	29	33	41	66
50	100	4.64	6	6	9	12	13	14	19	21	23	28	32	37	40	51	80
100	200	5.85	7	7	12	15	16	18	23	26	29	35	41	47	53	64	100
200	300	6.69	7	8	13	16	18	20	27	30	33	40	47	54	60	74	120
300	400	7.37	8	9	15	18	20	22	29	33	37	44	52	59	65	81	130
400	500	7.94	9	10	16	20	22	24	32	36	40	48	56	64	70	87	140
500	600	8.43	9	11	17	22	23	25	34	38	42	51	59	67	75	93	150
600	700	8.88	10	11	18	22	24	27	36	40	44	53	62	71	80	98	160
700	800	9.28	10	12	19	24	26	28	37	42	46	56	65	74	84	102	170
800	900	9.65	11	13	19	24	27	29	39	43	48	58	68	77	87	106	175
900	1,000	10.00	11	13	20	25	28	30	40	45	50	60	70	80	90	110	180
1,000	1,500	11.45	13	14	23	28	31	34	46	52	57	69	80	92	105	126	210
1,500	2,000	12.60	14	16	25	32	34	38	50	57	63	76	88	100	115	139	230
2,000	3,000	14.42	16	18	29	36	40	43	58	65	72	86	100	115	130	158	260
3,000	4,000	15.87	17	20	32	40	44	48	63	71	79	95	110	125	145	175	290
4,000	5,000	17.10	19	21	34	42	47	51	68	77	85	103	120	135	155	188	310
5,000	6,000	18.17	20	23	36	46	50	54	73	82	91	109	125	145	165	200	330
6,000	7,000	19.13	21	24	38	48	53	57	77	86	96	115	135	155	170	210	345
7,000	8,000	20.00	22	25	40	50	55	60	80	90	100	120	140	160	180	220	360
8,000	9.,000	20.80	23	26	42	52	57	62	83	94	105	125	145	165	185	230	375
9,000	10,000	21.54	24	27	43	54	59	65	86	97	110	130	150	170	195	235	390
10,000	15,000	24.66	28	31	50	62	68	74	99	110	125	150	175	195	225	275	445
15,000	20,000	27.14	30	34	55	68	75	81	110	120	135	165	190	215	245	300	490
20,000	25,000	29.24	33	37	59	74	81	88	115	130	145	180	205	235	265	325	530
25,000	30,000	31.07	35	39	62	78	85	93	125	140	155	185	220	250	280	340	560
30,000	35,000	32.71	36	41	66	82	90	98	130	145	165	200	230	260	295	360	590
35,000	40,000	34.20	38	43	69	85	95	105	135	155	170	205	240	275	310	375	620
40,000	45,000	35.57	40	45	72	89	98	105	140	160	180	215	250	285	320	395	640
45,000	50,000	36.84	41	46	74	90	100	110	145	165	185	220	260	295	330	405	665
50,000	55,000	38.03	42	48	77	96	105	115	150	170	190	230	265	305	340	420	685
55,000	60,000	39.15	44	49	79	98	110	115	155	175	195	235	275	315	350	430	705
60,000	65,000	40.21	45	51	81	105	115	120	160	180	200	240	280	320	360	445	725
65,000	70,000	41.21	45	52	82	105	115	125	165	185	205	245	290	330	370	455	740
70,000	75,000	42.17	46	53	85	110	120	125	170	190	210	255	295	335	380	465	760
75,000	80,000	43.09	47	54	86	110	120	130	170	195	215	260	300	345	390	475	780
80,000	85,000	43.97	49	55	88	110	125	130	175	195	220	265	310	350	395	485	790
85,000	90,000	44.81	50	56	90	110	125	135	180	200	225	270	315	360	405	495	810
90,000	95,000	45.63	51	58	92	115	130	135	185	205	230	275	320	365	410	505	820
95,000	100,000	46.42	51	59	93	115	130	140	185	210	230	280	325	370	420	510	840
100,000	110,000	47.91	53	60	96	120	135	145	190	215	240	290	335	385	435	530	865
110,000	120,000	49.32	54	62	99	125	140	150	195	220	245	300	345	395	445	545	890
120,000	125,000	50.00	55	63	100	125	140	150	200	225	250	300	350	400	450	550	900
125,000	130,000	50.66	56	64	105	130	140	150	205	230	255	305	355	405	460	560	915
130,000	140,000	51.92	58	65	105	130	145	155	210	230	260	315	365	415	470	575	935
140,000	150,000	53.13	59	66	110	130	145	160	215	240	265	320	370	425	480	585	960
150,000	160,000	54.29	60	68	110	140	150	165	215	245	270	330	380	435	490	600	980
160,000	170,000	55.40	61	70	110	140	155	165	220	250	275	335	390	445	500	610	1,000
170,000	175,000	55.93	62	70	110	140	155	170	225	250	280	335	390	445	505	615	1,010
175,000	180,000	56.46	63	71	115	145	160	170	225	255	280	340	395	450	510	625	1,020
180,000	190,000	57.49	64	72	115	145	160	170	230	260	285	345	400	460	520	635	1,035
190,000	200,000	58.48	65	74	115	145	160	175	235	265	290	350	410	470	525	645	1,055
200,000	225,000	60.82	67	76	120	150	165	180	245	275	305	365	425	485	545	670	1,095
225,000	250,000	63.00	70	79	125	160	175	190	250	285	315	380	440	505	565	695	1,135
250,000	275,000	65.03	72	82	135	165	180	195	260	295	325	395	455	520	585	720	1,170
275,000	300,000	66.94	74	84	135	170	185	200	270	300	335	400	470	535	600	735	1,205
300,000	325,000	68.75	76	86	140	175	190	205	275	310	345	415	480	550	620	760	1,240
325,000	350,000	70.47	78	89	140	175	195	210	280	315	350	425	495	565	635	775	1,270
350,000	375,000	72.11	80	91	145	180	200	215	290	325	360	435	505	575	650	795	1,300
375,000	400,000	73.68	81	92	145	185	205	220	295	330	370	440	515	590	665	810	1,330
400,000	425,000	75.18	83	94	155	190	210	225	300	340	375	455	525	600	680	830	1,335
425,000	450,000	76.63	85	96	155	190	210	230	305	345	385	460	535	615	690	845	1,380
450,000	475,000	78.02	86	98	160	200	215	235	310	350	390	470	545	625	705	860	1,405
475,000	500,000	79.37	88	100	160	200	220	240	315	355	395	475	555	635	715	875	1,430

Table 3.6. Continued.

NET EXPLOSIVE WEIGHT (POUNDS)			DISTANCE FROM POTENTIAL EXPLOSION SITE TO EXPOSED SITE (FOR GIVEN K-FACTOR) (FEET)										
OVER	NOT OVER-	CUBE ROOT OF UPPER LIMIT	**K15/30**	**K21/30**	**K24/30**	**K30**	**K37**	**K40**	**K25/50**	**K35/50**	**K40/50**	**K50**	**K62**
			IG-PTR	IG-PTR	PTR	ACFT	HAS-	POL	IG-IB	IG-IB	IB	HAS-IB	HAS-IB
0	1	1.00	15	21	24	30	37	40	25	35	40	50	62
1	2	1.26	19	26	30	38	47	50	32	44	50	63	78
2	5	1.71	26	36	40	52	63	69	43	60	69	85	105
5	10	2.15	32	45	52	65	80	87	54	75	87	110	135
10	20	2.71	41	57	65	82	100	110	68	95	110	135	170
20	30	3.11	47	65	75	94	115	125	78	110	125	155	195
30	40	3.42	51	72	83	105	125	140	86	120	140	170	210
40	50	3.68	55	77	89	115	135	150	92	130	150	185	230
50	100	4.64	70	97	115	140	170	190	115	160	190	230	290
100	200	5.85	88	125	140	180	215	235	145	205	235	290	365
200	300	6.69	100	140	160	205	250	270	165	235	270	335	415
300	400	7.37	110	155	175	225	275	295	185	260	295	370	455
400	500	7.94	120	165	190	240	295	320	200	280	320	395	490
500	600	8.43	125	175	205	255	310	340	210	295	340	420	525
600	700	8.88	135	185	215	270	330	355	220	310	355	445	550
700	800	9.28	140	195	225	280	345	375	230	325	375	465	575
800	900	9.65	145	205	235	290	355	390	240	340	390	485	600
900	1,000	10.00	150	210	240	300	370	400	250	350	400	500	620
1,000	1,500	11.45	170	240	275	345	425	460	285	400	460	570	710
1,500	2,000	12.60	190	265	305	380	465	505	315	440	505	630	780
2,000	3,000	14.42	215	305	350	435	535	580	360	505	580	720	895
3,000	4,000	15.87	240	335	380	480	585	635	395	555	635	795	985
4,000	5,000	17.10	255	360	410	515	635	685	430	600	685	855	1,060
5,000	6,000	18.17	275	380	440	550	670	730	455	635	730	910	1,125
6,000	7,000	19.13	285	400	460	575	710	770	480	670	770	955	1,185
7,000	8,000	20.00	300	420	480	600	740	800	500	700	800	1,000	1,240
8,000	9,000	20.80	310	435	500	625	770	835	520	730	835	1,040	1,290
9,000	10,000	21.54	325	450	520	650	795	865	540	755	865	1,075	1,335
10,000	15,000	24.66	370	520	595	740	NOT	990	615	865	990	NOT	NOT
15,000	20,000	27.14	405	570	655	815	AUTH	1,090	680	950	1,090	AUTH	AUTH
20,000	25,000	29.24	440	615	700	880		1,170	730	1,025	1,170		
25,000	30,000	31.07	465	650	745	935		1,245	775	1,085	1,245		
30,000	35,000	32.71	490	685	785	985		1,310	820	1,145	1,310		
35,000	40,000	34.20	515	720	820	1,030		1,370	855	1,195	1,370		
40,000	45,000	35.57	535	745	855	1,070		1,425	890	1,245	1,425		
45,000	50,000	36.84	555	775	885	1,110		1,475	920	1,290	1,475		
50,000	55,000	38.03	570	800	910	1,145		1,520	950	1,330	1,520		
55,000	60,000	39.15	585	820	940	1,175		1,565	980	1,370	1,565		
60,000	65,000	40.21	605	845	965	1,210		1,610	1,005	1,405	1,610		
65,000	70,000	41.21	620	865	990	1,240		1,650	1,030	1,440	1,650		
70,000	75,000	42.17	635	885	1,010	1,270		1,685	1,055	1,475	1,685		
75,000	80,000	43.09	645	905	1,035	1,295		1,725	1,075	1,510	1,725		
80,000	85,000	43.97	660	925	1,055	1,320		1,760	1,100	1,540	1,760		
85,000	90,000	44.81	670	940	1,075	1,345		1,795	1,120	1,570	1,796		
90,000	95,000	45.63	685	960	1,095	1,370		1,825	1,140	1,595	1,825		
95,000	100,000	46.42	695	975	1,115	1,395		1,855	1,160	1,625	1,855		
100,000	110,000	47.91	770	1,045	1,175	1,440		1,920	1,290	1,740	1,960		
110,000	120,000	49.32	850	1,110	1,240	1,480		1,975	1,415	1,855	2,065		
120,000	125,000	50.00	890	1,145	1,270	1,500		2,000	1,480	1,910	2,115		
125,000	130,000	50.66	925	1,180	1,300	1,520		2,030	1,545	1,965	2,165		
130,000	140,000	51.92	1,005	1,245	1,355	1,560		2,080	1,675	2,070	2,255		
140,000	150,000	53.13	1,085	1,305	1,410	1,595		2,130	1,805	2,175	2,350		
150,000	160,000	54.29	1,160	1,370	1,460	1,630		2,175	1,935	2,280	2,435		
160,000	170,000	55.40	1,240	1,430	1,515	1,665		2,220	2,070	2,385	2,520		
170,000	175,000	55.93	1,280	1,460	1,540	1,680		2,240	2,135	2,435	2,565		
175,000	180,000	56.46	1,320	1,490	1,565	1,695		2,260	2,200	2,485	2,605		
180,000	190,000	57.49	1,400	1,550	1,615	1,725		2,300	2,335	2,585	2,690		
190,000	200,000	58.48	1,480	1,610	1,660	1,755		2,340	2,470	2,680	2,770		
200,000	225,000	60.82	1,685	1,750	1,780	1,825		2,435	2,810	2,920	2,965		
225,000	250,000	63.00	1,890	1,890	1,890	1,890		2,520	3,150	3,150	3,150		
250,000	275,000	65.03	1,950	1,950	1,950	1,950		2,605	3,250	3,250	3,250		
275,000	300,000	66.94	2,005	2,005	2,005	2,005		2,680	3,345	3,345	3,345		
300,000	325,000	68.75	2,065	2,065	2,065	2,065		2,755	3,440	3,440	3,440		
325,000	350,000	70.47	2,115	2,115	2,115	2,115		2,820	3,525	3,525	3,525		
350,000	375,000	72.11	2,165	2,165	2,165	2,165		2,885	3,605	3,605	3,605		
375,000	400,000	73.68	2,210	2,210	2,210	2,210		2,950	3,685	3,685	3,685		
400,000	425,000	75.18	2,250	2,250	2,250	2,250		3,010	3,760	3,760	3,760		
425,000	450,000	76.63	2,300	2,300	2,300	2,300		3,070	3,830	3,830	3,830		
450,000	475,000	78.02	2,340	2,340	2,340	2,340		3,125	3,900	3,900	3,900		
475,000	500,000	79.37	2,380	2,380	2,380	2,380		3,175	3,970	3,970	3,970		

NOTES:

1. To compute distance for K-factors not shown, use the formula $D= KxW^{1/3}$ or use multiples of given K-factors, as shown in the following example:

K36 distance = 2 x K18 distance
K60 distance = 1.5 x K40 distance
K300 distance = 10 x K30 distance

2. For weights not shown or weights over 500,00 pounds, distance may be calculated using $D=K \times W^{1/3}$.

3. K24/30, K40/50, etc., are K-factors that vary with NEW. For any of these type K-factors with a lower (Kxx) and upper (Kyy) value, the change in value is as follows:

NEW (pounds)	Kxx/yy Value
0 - 100,000	Kxx
100,000 - 250,000	Kxx-Kyy
Over 250,000	Kyy

The K-factors between 100,000 pounds and 250,000 pounds increase gradually, but not proportionately, to the NEW. These changes are based on test results that have shown increased blast effects for large NEWs. For NEWs between the values given, compute the required distance using the following formula:

For known distance [D] use: $W_x= W_L + N(W_H-W_L)$ where $N = \frac{(D-D_L)}{(D_H-D_L)}$

For known NEW [W] use: $D_x= D_L + M(D_H-D_L)$ where $M = \frac{(W-W_L)}{(W_H-W_L)}$

Where:

W_X = unknown NEW (for a given D)
Dx = unknown distance (for a given W)
M and N = calculated multiplier between .01 and .99
W_H = known NEW (from "NOT OVER" column) and distance greater than the unknown NEW (from Table 3.6).
W_L = known NEW (from "NOT OVER" column) and distance less than the unknown NEW (from Table 3.6).
D_H = known distance (from K factor column) and NEW greater than the unknown distance (from Table 3.6).
D_L = known distance (from K factor column) and NEW less than the unknown distance (from Table 3.6).

100K - 250K: K25/50 use $D= 0.004125W^{1.0898}$
K35/50 use $D= 0.3955W^{0.7227}$
K40/50 use $D= 2.42W^{0.577}$
K15/30 use $D= 0.002475W^{1.0898}$
K21/30 use $D=0.2373W^{0.7227}$
K24/30 use $D= 1.452W^{0.577}$

1160 ft - 3148 ft: K25/50 use $W= 242.4242D^{0.9176}$
1624 ft - 3148 ft: K35/50 use $W= 2.52844D^{1.3837}$
1875 ft - 3148 ft: K40/50 use $W= 0.413223D^{1.7331}$
696 ft - 1890 ft: K15/30 use $W= 404.0404D^{0.9176}$
975 ft - 1890 ft: K21/30 use $W= 4.21408D^{1.3837}$
1114 ft - 1890 ft: K24/30 use $W= 0.688705D^{1.7331}$

Table 3.7 Class/Division 1.1 Intraline Distances From Earth-Covered Igloos

NEW (lbs)	Barricaded (ft)			Unbarricaded (ft)		
	Front	Side	Rear	Front	Side	Rear
50	35	25	20	60	60	45
100	45	30	30	80	75	55
200	60	40	35	100	95	70
300	65	45	40	120	105	80
400	75	50	45	130	120	90
500	80	55	50	140	125	95
600	85	60	50	150	135	100
700	90	60	55	160	140	105
800	90	65	55	170	150	110
900	95	70	60	175	155	115
1,000	100	70	60	180	160	120
1,500	115	80	70	210	185	135
2,000	125	90	75	230	200	150
3,000	145	100	85	260	230	175
4,000	160	110	95	290	255	190
5,000	170	120	100	310	275	205
6,000	180	125	110	330	290	220
7,000	190	135	115	340	305	230
8,000	200	140	120	260	320	240
9,000	210	145	125	370	330	250
10,000	215	150	130	390	345	260
15,000	245	175	150	450	395	295
20,000	270	190	165	490	435	325
25,000	290	205	175	530	470	350
30,000	310	220	185	560	500	370
35,000	325	230	195	590	525	390
40,000	340	240	205	620	545	410
45,000	355	250	215	640	570	425
50,000	370	260	220	660	590	440
55,000	380	265	230	680	610	455
60,000	390	275	235	700	625	470
65,000	400	280	240	720	645	480
70,000	410	290	245	740	660	495
75,000	420	295	255	760	675	505
80,000	430	300	260	780	690	520
85,000	440	310	265	790	705	530
90,000	450	315	270	810	715	540
95,000	455	320	275	820	730	545
100,000	465	325	280	840	745	555
125,000	500	350	300	900	800	605
150,000	530	370	320	960	850	650
175,000	560	390	335	1,010	895	700
200,000	585	410	350	1,055	935	745
225,000	610	425	365	1,090	975	795
250,000	630	440	380	1,135	1,005	840
275,000	650	455	390	1,170	1,040	890
300,000	670	470	400	1,200	1,070	935
325,000	675	520	465	1,240	1,135	1,035
350,000	680	570	530	1,270	1,200	1,130
375,000	685	615	600	1,300	1,265	1,230
400,000	690	665	665	1,330	1,330	1,330
500,000	715	715	715	1,430	1,430	1,430

NOTE: Variable K factors are incorporated. See Table 3.3, Note 61 for additional information.

Table 3.8. Hazard Class Division 1.2 Separation Distances

Category	NEW	Inhabited Building Distance	Public Traffic Route Distance	Intraline Distance	Magazine Distance Above Ground	Magazine Distance Earth Covered
[04] (1) (2)	Physical Capacity	400	240	200	200 (3)	(4)
[08] (5)	Physical Capacity	800	480	400 (6)	300 (3)	(4)
[12] (7) (9)	500,000	1200	720	600 (6)	300 (3)	(4)
[18] (8) (9)	500,000	1800	1080	900	300 (3)	(4)

Notes:

1. Example of items: Small arms ammunition with explosive projectiles; fuzed ammunition with non-explosive projectiles when caliber and packing limit the hazard in accordance with this hazard division; WP smoke hand grenades; and nonmass-detonating CBUs.

2. Limited quantities of items in this hazard division, for reasons of operational necessity, may be stored in facilities such as hangars, troop buildings, and manufacturing or operating buildings without regard to quantity-distance. Examples of such items are small destructors, fuzes, firing devices, and 40mm grenades. Fragmentation shielding will be provided.

3. For module storage a light metal shed or other lightweight fire retardant cover may be used for weather protection for individual cells. Heavy structures (reinforced concrete, dense masonry units) or flammable material will not be used. Priority shall be given to covered storage (igloos) for items requiring protection from the elements or long term storage. The maximum NEW permitted to be stored within each cell is 250,000 lbs.

★4. When necessary, fill earth-covered igloos to their physical capacity with HC/D 1.2 (04) or (08) and 500,000 pounds for subdivisions (12) or (18) explosives, provided the igloos are properly sited for at least 200 pounds of HC/D 1.1 material. This provision applies only to IM between earth-covered igloos. In no case will the required IB, PTR, or IL distances be less than the minimum specified when a subdivision of HC/D 1.2 is being stored. For example, 1800 feet is required for HC/D 1.2 (18.) See note 13 for an exception to IB, PTR, and IL distance for HC/D 1.2 (04) CBUs in a HAS.

5. Example of items: Fixed and semi-fixed ammunition, rockets and rocket components, chemical ammunition containing explosive elements, and nonmass-detonating CBUs.

6. If the HE in (08) 1.2 or (12) 1.2 items at an operating line PES is limited to 5000 lbs, intraline distance may be reduced to 200 ft.

7. Example of items: Separate projectiles with explosive "D" filler, except high capacity types, caliber 8-inch or larger; fixed and semi-fixed ammunition; nonmass-detonating CBUs; rockets, rocket motors and nonmass-detonating rocket heads; and chemical ammunition containing explosive components.

8. Example of items: Nonmass-detonating HE-loaded projectiles, fixed and semi-fixed ammunition, and rockets and rocket heads.

9. Items of this category present a risk of propagation to adjacent aboveground magazines, particularly when packed in combustible containers. Storage in earth-covered magazines is therefore preferred.

Table 3.9. Hazard/Class Division 1.3 Separation Distances. (1) (2)

NEW (lbs)	IB or PTR (ft) (3)	Above-Ground IM or IL (ft)(3)	NEW (lbs)	IB or PTR (ft) (3)	Above-Ground IM or IL (ft)(3)	NEW (lbs)	IB or PTR (ft) (3)	Above-Ground IM or IL (ft)(3)
1,000	75	50	92,000	296	196	560,000	627	413
2,000	86	57	94,000	297	197	570,000	632	415
3,000	96	63	96,000	298	198	580,000	636	418
4,000	106	69	98,000	299	199	590,000	641	420
5,000	115	75	100,000	300	200	600,000	645	422
6,000	123	81	110,000	307	205	610,000	649	424
7,000	130	86	120,000	315	210	620,000	654	426
8,000	137	91	130,000	322	215	630,000	658	428
9,000	144	96	140,000	330	220	640,000	662	430
10,000	150	100	150,000	337	225	650,000	667	432
12,000	159	105	160,000	345	230	660,000	671	435
14,000	168	111	170,000	352	235	670,000	675	437
16,000	176	116	180,000	360	240	680,000	679	439
18,000	183	120	190,000	367	245	690,000	684	441
20,000	190	125	200,000	375	250	700,000	688	443
22,000	195	130	210,000	383	255	710,000	692	445
24,000	201	134	220,000	390	260	720,000	696	447
26,000	206	138	230,000	398	265	730,000	700	449
28,000	210	142	240,000	405	270	740,000	704	451
30,000	215	145	250,000	413	275	750,000	708	453
32,000	219	147	260,000	420	280	760,000	712	455
34,000	224	149	270,000	428	285	770,000	716	457
36,000	228	151	280,000	435	290	780,000	720	459
38,000	231	153	290,000	443	295	790,000	724	461
40,000	235	155	300,000	450	300	800,000	728	463
42,000	238	157	310,000	458	305	810,000	732	465
44,000	242	159	320,000	465	310	820,000	735	467
46,000	245	161	330,000	473	315	830,000	739	469
48,000	247	163	340,000	480	320	840,000	743	471
50,000	250	165	350,000	488	325	850,000	747	472
52,000	252	167	360,000	495	330	860,000	750	474
54,000	254	169	370,000	503	335	870,000	754	476
56,000	256	171	380,000	510	340	880,000	758	478
58,000	258	173	390,000	518	345	890,000	761	480
60,000	260	175	400,000	525	350	900,000	765	482
62,000	262	177	410,000	533	355	910,000	769	484
64,000	264	180	420,000	541	361	920,000	772	486
66,000	266	182	430,000	549	366	930,000	776	487
68,000	268	183	440,000	556	371	940,000	779	489
70,000	270	185	450,000	564	376	950,000	783	491
72,000	272	186	460,000	571	381	960,000	786	493
74,000	274	187	470,000	579	386	970,000	790	495
76,000	276	188	480,000	586	391	980,000	793	496
78,000	278	189	490,000	593	395	990,000	797	498
80,000	280	190	500,000	600	400	1,000,000	800	500
82,000	284	191	510,000	605	402			
84,000	287	192	520,000	609	404			
86,000	290	193	530,000	614	407			
88,000	293	194	540,000	618	409			
90,000	295	195	550,000	623	411			

Notes:

1. For quantities less than 1,000 lbs, the required distances are those specified for 1,000 lbs. The use of lesser distances may be approved when supported by test data and/or analysis. Linear interpolation of NEW quantities between table entries is permitted. For quantities above 1,000,000 lbs, the values given above will be extrapolated by means of cube-root scaling as follows:
   a. For inhabited building distance (IB) and public traffic route (PTR) distance, use D = 8 W 1/3 .
   b. For aboveground intermagazine distance (IM) and intraline distance (IL), use D = 5 W 1/3 .
2. List of items (examples only): Military pyrotechnics; solid propellants in bulk, in containers, or in ammunition items; and nontoxic chemical ammunition.
3. Items will be placed in this hazard division if they qualify for assignment to it after evaluation in accordance with Chapter 2.
4. For reasons of operational necessity, limited quantities of items in this hazard division, such as document destroyers, signaling devices, riot control munitions and the like, may be stored without regard to quantity-distance in accordance with fire protection regulations in facilities such as hangars, arms rooms, and operating buildings.
5. The same distances are used for IB and PTR.
6. The same distances are used for aboveground IM and IL. Earth-covered buildings may be used to their physical capacity for this hazard division provided they comply with the construction and siting requirements of Chapter 3 for HC/D 1.1. Earth-covered magazines used to store only HC/D 1.3 items must be sited for a minimum of 200 lbs of HC/D 1.1 item.

Table 3.10. Hazard Class/Division 1.6 Separation Distances.

NEW (lbs)	IBD or PTR	IM or IL (ft)	NEW(lbs)	IBD or PTR (ft)	IM or IL (ft)
0-100	37	23	75,000	337	211
200	47	29	80,000	345	215
300	54	33	85,000	352	220
400	59	37	90,000	359	224
500	64	40	95,000	365	228
600	67	42	100,000	371	232
700	71	44	110,000	383	240
800	74	46	120,000	395	247
900	77	48	125,000	400	250
1,000	80	50	130,000	405	253
2,000	101	63	140,000	415	260
3,000	115	72	150,000	425	266
4,000	127	79	160,000	434	271
5,000	137	86	170,000	443	277
6,000	145	91	175,000	447	280
7,000	153	96	180,000	452	282
8,000	160	100	190,000	460	287
9,000	166	104	200,000	468	292
10,000	172	108	225,000	487	304
15,000	197	123	250,000	504	315
20,000	217	136	275,000	520	325
25,000	234	146	300,000	536	334
30,000	249	155	325,000	550	344
35,000	262	164	350,000	564	352
40,000	274	171	375,000	577	361
45,000	285	178	400,000	589	368
50,000	295	184	425,000	601	376
55,000	304	190	450,000	613	383
60,000	313	196	475,000	624	390
65,000	322	201	500,000	635	397
70,000	330	206			

Notes:

1. Earth-covered magazines may be used to their physical capacity for this hazard division, provided they are properly sited for at least 200 lbs HC/D 1.1.

2. Interpolation is permitted. For inhabited building distance and public traffic route use D = 8W 1/3 . For aboveground and intraline distance use 5W 1/3.

3. Single round distance applies as a minimum; that is, for IB or PTR, D = 40W 1/3 or minimum fragment distance, whichever is greater; and for aboveground IM or IL, D = 18W 1/3, based on a single round of ammunition. Minimum fragment distance is based on hazardous fragment aerial density requirements as determined for HC/D 1.1 munitions.

4. When specifically approved by HQ AFSC/SE, HC/D 1.6 items, packed in non-flammable pallets or packing, may be stored in earth-covered igloos at the following distances, unless Table 3.10 permits a lesser distance requirement: IB and PTR--100 ft; aboveground IM and IL--50 ft; earth-covered IM--No specified requirement.

3.12. Barricades. Properly constructed or natural barricades provide protection against fragments. Barricades or earth-covered structures eliminate the risk of propagating explosions caused by low-angle, high-speed fragments. Barricade elevation is effective when a straight line, drawn from a point described in paragraph 3.12.1 to a point described in paragraph 3.12.2, passes through the top width of the barricade. A barricade of this elevation should prevent simultaneous propagation of an explosion from one quantity of mass-detonating explosives to another. See Figure 3.2.

3.12.1. From:

3.12.1.1. The top of the side wall of a magazine or operating building.

3.12.1.2. The top of a stack containing explosives, as in paragraph 3.12.1.4.

3.12.1.3. Explosive items on aircraft or emplaced missiles.

3.12.1.4. Base barricade heights derived from the use of 3.12.1.2. on the following. A straight line drawn from the top of the far edge of the stack edge away from the barricade) at a two degree angle above the horizontal must pass through the 3-foot width of the crest (berm) of the barricade. Where feasible, scale barricade heights up 3 to 5 feet, based on a line drawn (as explained above) at an angle of 5 degrees above the horizontal. When protecting aircraft, facilities and personnel at K26 or less, a vertical-sided barricade provides a reduction in blast overpressure to three or four times the height of the barricade in a horizontal line (for example, a 20-foot barricade would shield a 40-feet-deep building setting 20 feet from the barricade, from low-angle, high-speed fragments and some blast pressure). The slope-sided barricade may ricochet fragments and is less effective in deflecting blast pressure.

3.12.2. To:

3.12.2.1. The highest point of any IB being protected.

3.12.2.2. A point 12 feet above the center of any highway or railway being protected.

3.12.2.3. Barricade protection to the highest point on an aircraft or missile launcher may be desirable to reduce direct fragment damage to the aircraft.

3.12.2.4. If desiring to protect any magazine, operating building, storage site or other facility or material containing explosives, choose a point at least the minimum given in paragraphs 3.12.2.1, 3.12.2.2, and 3.12.2.3.

3.12.3. Natural Barricades. Protected storage facilities built underground, into hills or separated by hills may permit reduced Q-D. Consider each case separately. Submit details in the site plans, including topographical maps of the terrain. A barricade exists when the gross average density of vegetation between the PES and ES is at least 2000 grains per cubic foot. HQ AFSC/SE must approve use of vegetation barricading.

3.12.4. Artificial Barricades. Select cohesive earth fill, free from unhealthy organic matter, trash, debris and frozen material. Keep in the lower center of the barricade. Don't use stones heavier than 10 pounds or larger than 6 inches. Compact and prepare the surface to keep structural integrity and control erosion. Effective artificial barricades are:

3.12.4.1 Earth, 20 feet or less in height, having a crest (berm) at least three feet wide. The slope will not be steeper than 1.5 horizontal to 1 vertical. Use slopes of 2 horizontal to 1 vertical for new facilities to reduce erosion and ease maintenance.

3.12.4.2. Earth more than 20 feet in height and at least 5 feet wide at the top, with earth sloping as in paragraph 3.12.4.1.

3.12.4.3. Earth meeting the requirements of paragraphs 3.12.4.1 or 3.12.4.2, modified by substituting a retaining wall for the slope on one side. The slope and thickness of the retaining wall (preferably of concrete) must ensure a wide enough top to hold the earth firmly in place.

★3.12.5 Earth-Filled, Steel-Bin-Type Barricades (ARMCO, Republic type, or equal.) These barricades will minimize the possibility of propagation to adjacent explosives; however, they will not prevent major damage or destruction of aircraft or munitions.

3.12.5.1 A connected series of such revetments may be sited for the explosives weight of one revetment.

3.12.5.1.1 Site flightline revetment sets for combat aircraft parking and loading as a combat aircraft parking area according to Table 3.3 These revetment sets may be used for both aircraft parking and munitions holding.

3.12.5.1.2 Site flightline revetment sets used for munitions as flightline munitions holding areas according to Table 3.3.

3.12.5.1.3 Site revetments used solely for the storage of munitions as barricaded (ES) above-ground magazines according to Table 3.3.

3.12.5.2 To limit mishap potential, munitions should be dispersed as widely as possible within each cell. Munitions shall be positioned with the objective of distributing them over the available area within the cell, rather than concentrating them in a small area. The contents of a cell (stored in quantities near the maximum NEW limit) must not be configured into a single row of stacks, pallets, or trailers. However, in all cases, explosives will be positioned at least 10 feet from revetment walls, three feet from the end of the wing walls, and two feet below the top of walls. Storage of munitions in flammable outer-pack configurations must be minimized. See attachment 7 for a list of munitions approved for this type of storage.

3.12.5.2.1 Type A revetments have earth-filled walls which must be a minimum 7-foot thick. They may be used to limit the Maximum Credible Event (MCE) in a series of cells to the largest quantity in any single cell if that quantity does not exceed 30,000 pounds NEW.

3.12.5.2.2 Type B revetments must have earth-filled walls which must be a minimum 5-foot 3-inch thick. They may be used to limit the MCE, provided no cell contains more than 5,000 pounds NEW.

3.12.6. Inspection of Barricades**.** Inspect barricades periodically to determine the degree of settling or erosion. Add fill if a barricade has deteriorated and it no longer provides effective protection. Also inspect wood riveted barricades and replace rotten timbers or planking.

3.12.7. Siting Barricades. Place barricades as near the potential explosion site or exposed site as practical. They must not be more than the distance required for operations, walking, or building maintenance. Place barricades next to the exposed site or the potential explosion site, whichever provides the most effective protection.

★3.12.8 Magazines as Barricaded Structures. The earth cover over an igloo magazine must be at least 2 feet deep. Earth cover and side fill requirements are the same as for barricades in paragraph 3.12.4. Restrict any large stones to the lower half of fills. The earth covers on the sides and rear of an igloo may be treated as barricades. Consider an aboveground magazine barricaded when it is protected by a barricade meeting the requirements of paragraph 3.12.3 or 3.12.4. A concrete-arch or steel-arch, earth-covered igloo is the preferred type of "barricaded" magazine for storing maximum amounts of HC/D 1.1 explosives, with minimum separation between locations. Consider igloo magazines as barricaded except for a 60 degree arc on either side of the centerline of the door. See Figure 3.3B for description of unbarricaded area for igloo door, side and rear exposures. Consider as side exposure of an igloo the area from the radial of the front unbarricaded angle to a radial 45 degrees at the rear of the igloo with the base of the angle extending along the side, perpendicular and past the rear wall. The rear exposure of an igloo is the area between the two 45 degree angles which are the rear limits of the side exposure. See Figure 3.4. For those igloos with unusual orientations refer to Figure 3.3:

3.12.8.1. In Figure 3.3(a) and (b) site A is a side-to-side ES and site B is a side-to-side orientation. Think of the orientations as from the PES to the ES.

3.12.8.2. In Figure 3.3(c) site A as a side-to-front ES and site B as a front-to side ES.

3.12.8.3. In Figure 3.3(d) site each igloo as a front-to front ES. Site C as a barricaded ES. Site A and B as unbarricaded ESs.

3.12.8.4. In Figure 3.3(e) site A as a side-to-front ES and site B as a front-to-side ES.

3.12.8.5. In Figure 3.3(f) site A as a side-to front ES and Site B as a front to side ES.

3.12.8.6. See Figure 3.3(g): When considering the relationship between igloos and aboveground magazines or operating locations apply the following:

3.12.8.6.1. For igloo siting applications, no credit is given for a barricade in front of an igloo acting as a PES. When acting as an ES, the same igloo with a barricade in front may be sited as a barricaded ES.

3.12.7.6.2. For igloo siting applications, no credit is given for a barricade in front of an aboveground magazine acting as a PES. When acting as an ES, the same aboveground magazine with a barricade in front may be sited as a barricaded ES.

3.12.8. Barricade Value.

3.12.8.1. Barricades have no effect on high-angle fragments that escape over their top. Some of these fragments may travel to the outer limits of protection areas set up for PTR and IB distances.

3.12.8.2. Eliminating dangerous low-angle, high-velocity fragments by barricading considerably reduces fragment density within a given radius. This will not reduce the size of the hazardous circle at distances discussed in paragraph 3.12.8.1.

3.12.8.3. Barricades, if properly designed and located, stop fragments. A barricade at the source can reduce fragment speed and density where high-density exposures of personnel and equipment may occur. A secondary barricade at sites of mission-essential equipment and personnel (such as wing communications and trim pads) can provide some additional protection; however, high-angle, low-velocity fragments will still impact the exposed site.

Figure 3.2. Typical Barricade - Stack Relationships.

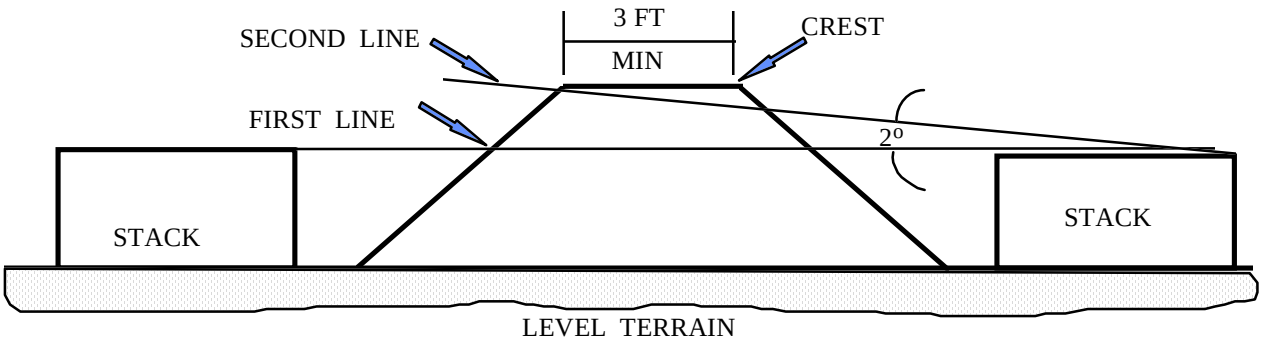

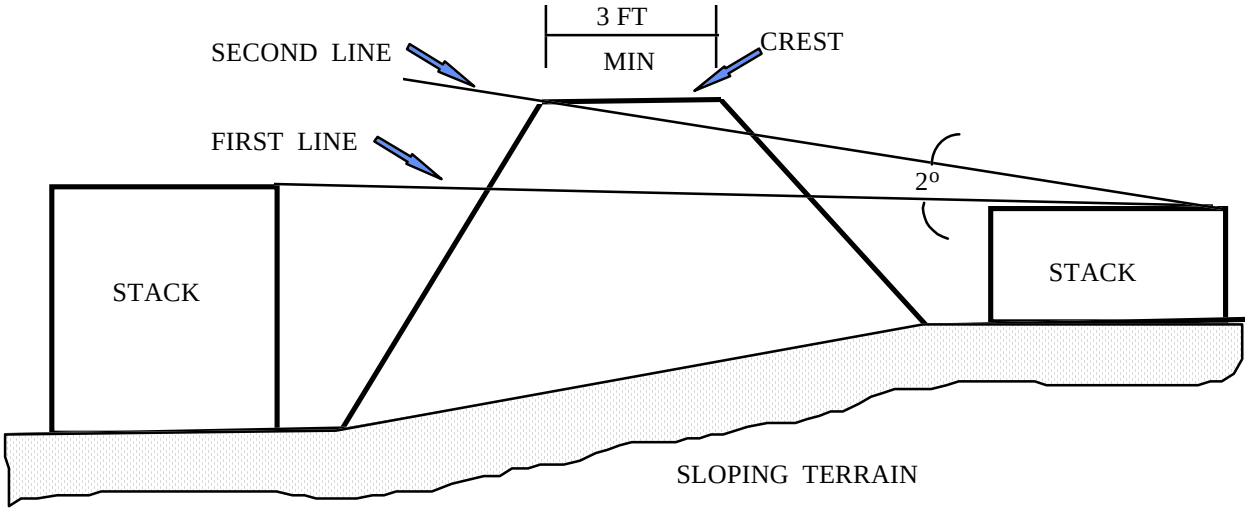

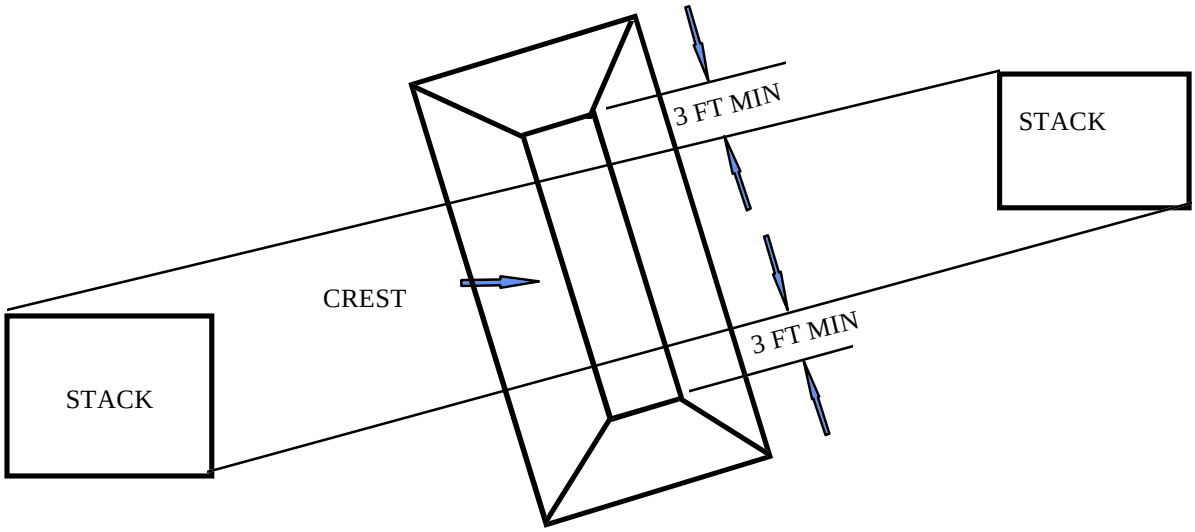

Figure 3.3. Orientation Effects on Intermagazine Distance.

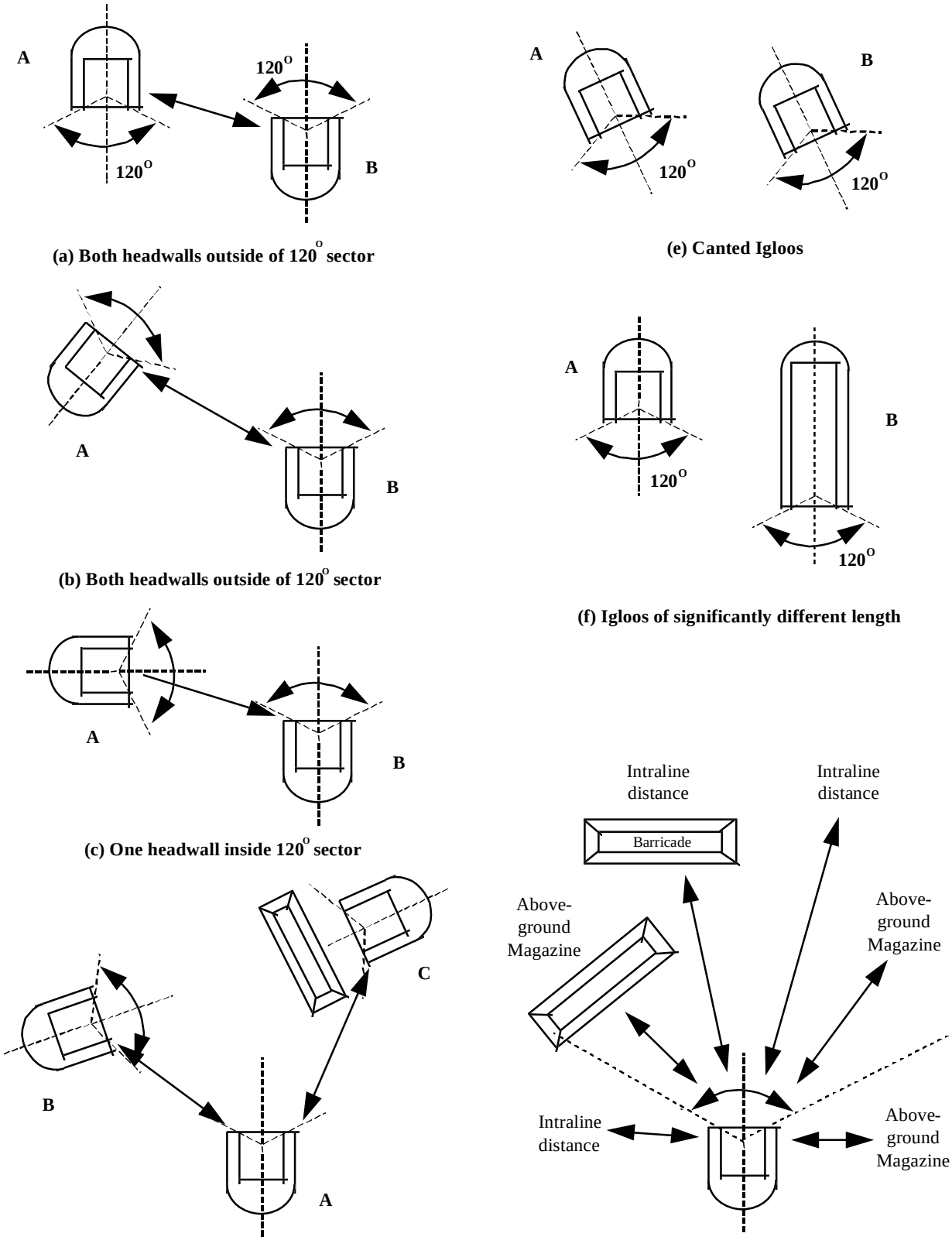

(a) Both headwalls outside of 120° sector

(b) Both headwalls outside of 120° sector

(c) One headwall inside 120° sector

(d) Both headwalls inside 120° sector

(e) Canted Igloos

(f) Igloos of significantly different length

(g) Barricaded & unbarricaded distances

3.12.8.4. Barricades with sloped sides are less effective than those with vertical sides (for example, steel bin barricades at least K1.1 from the source) in reducing blast pressure. However, for sources under 100,000 pounds NEW, either may give overpressure reduction of several psi out to three or four times the height of a barricade. The barricade becomes less effective as the blast wave progresses toward K40, where it is negligible; however, even here it is still effective against low-angle fragments. For quantities greater than 100,000 pounds NEW, the barricade provides some reduction in overpressure out to K15; however, it tends to increase overpressure from K15 to K40. Therefore, use of barricades at sources over 100,000 pounds NEW makes desirable the use of K28 to K36 for PTR distance, instead of K24/30 which is prescribed.

3.12.8.5. Barricades around the exposed site can be used to reduce minimum separations required by Table 3.3 or fragment distances from 1.2 munitions if tests or engineering analysis show the barrier will stop the low-angle, high-velocity fragments and the building will provide protection from the high-angle fragments that can be expected from the PES. The distance cannot be reduced below that required to provide adequate overpressure protection to the ES.

Section C--Q-D Criteria For Specific Facilities or Situations

3.13 Related Facilities. Certain explosives and nonexplosives facilities that closely support a PES are known as related facilities. Use K18 separation for these facilities from the supported PES.

3.13.1. General Related Facilities. Separate PES's from the applicable ES's listed below by the following minimum distances. Provide greater separations where possible.

★Table 3.11. Related Facilities.

Facility	Separation Required
Gatehouses; field offices[2,3]; dunnage preparation; small packing and shipping buildings; dog kennels; area security control (not central security control [CSC]) ; Motor pool dispatch points (for vehicles supporting storage area only); staffed power plants and staffed non-explosive hazardous material collection points (only supporting the weapons storage area); maintenance and inspection facilities; response force tactical facilities (RFTF); lunch rooms(with serving personnel);breakrooms and change houses supporting multiple PESs; inert operations involving components of an explosive weapon system.[5]	Use the "Related Facilities" row of Table 3.3.
Inert and dunnage storage facilities; one-person guard towers[1,3]; unoccupied power plants; transformer stations which exclusively support an explosives storage area.	50 feet minimum
Low pressure boilers; hazardous material collection points; paint storage buildings providing direct support to the PES.[5]	50 feet minimum from PES supported.
Guard (sentry) shelters and defensive fighting positions. Lunch rooms, breakrooms, and change houses used exclusively by personnel with duties within a single PES.	None

★***NOTES****: Do not apply Q-D to the offices of personnel (located within the PES) who perform hands-on maintenance in the bays (assemble, maintain, inspect, and test). The NCOIC and first level supervisors (crew chiefs) of those who do hands-on work, are also included in this Q-D exemption. Apply IL to branch/flight level supervision. For example, a missile shop does not need Q-D separation to those persons assigned, who perform missile maintenance, and their supervisors, to include the NCOIC of the missile shop. IL applies to anyone else, such as Munitions Operations (AFK), munitions control, training, mobility, etc.*

1. When essential for security purposes, site one-person guard towers at a distance equal to the height of the tower plus 50 feet (fire break distance) from explosives locations. However, the distance must not be less than the minimum given above.

2. Field offices and supply rooms directly supporting the munitions do not require explosives safety separation but must meet NFPA standards.

3. One-person security structures for weapons-loaded aircraft are exempt from separation requirements. However, provide the distance shown when possible.

4. The operation must involve support of an explosive operation such as repairing bomb fins, or the operation simulates an explosive operation, for example: Munitions Assembly Conveyor (MAC).

5. Some specially designed operating buildings have attached rooms for low-pressure boilers and other facilities. These buildings have safety features such as protective concrete separating walls (without openings) between boiler and working areas, light roof and frangible exterior walls for boiler enclosures. Such buildings, built according to Air Force definitive drawings, are exempt from these distance criteria. This exception applies only where equipment installed or contained in attached rooms meets or exceeds original specifications and does not create additional hazards.

★3.13.2. Munitions or Weapons Storage Area Related Facilities. Activities directly associated with munitions storage or munitions operations are considered related. All related operations or activities within a munitions area are related to one another, regardless of the owning service, organization or country. As an exposed site these facilities must not only be separated by IL from a PES they are related to, (for example: the munitions storage area office from the munitions storage area igloos), but must also be separated from any PES outside the munitions storage area they are not related to by incremental IBD. (For example: the munitions storage area office from a combat aircraft.) However, explosives operating locations may be protected by IL distance from combat aircraft they directly support.

3.13.3. Direct Combat Aircraft Generation Related Facilities. All facilities and functions directly involved in maintaining, servicing, controlling, and flying combat aircraft are considered related to ammunition and explosives on the flightline supporting those combat aircraft. For Q-D purposes, all combat forces at a single location are considered related. This may include Air Force, Army, Navy, and host nation aircraft. One set of Q-D criteria applies to all combat forces at a single location. For example facilities/functions related to Air Force fighter aircraft are also related to Navy fighter aircraft.

3.13.3.1. Separate unhardened combat aircraft generation-related facilities from munitions storage and operating facilities by incremental K40/50. If these functions are located in a HAS, reduce separation to K30 to the frontal cone and K9 or K18 (Table 3.3, note 6) to the sides or rear. Site other hardened facilities at less than K40/50, dependent on the design of the facility and the hazards of the PES. Provide equivalent protection.

3.13.3.2. The primary test to be applied in determining related facilities is that the function must provide essential daily and direct support for the PES presenting the hazard. To determine if a facility is truly related and can be sited at IL, the following statements must all be applicable:

- The function is critical to the generation and launching of combat aircraft.
- If the facility or function was sited at IBD, the ability to generate or launch combat aircraft would be adversely affected.
- If the function were broken into sub-functions and separated, the ability to generate or launch combat aircraft would be adversely affected.

3.13.3.3. Examples of facilities and functions generally considered related to combat aircraft generation include:

- Logistics Group and Operations Group functions.
- POL or LOX servicing facilities, including hot pit refueling areas.
- Civil engineering functions solely dedicated to maintaining the runway and taxiways.
- Forward supply points.
- Intelligence, debriefing, and flightline security functions.

★3.13.3.4. Q-D separation standards do not apply to arm and dearm pads when the PES is an aircraft undergoing servicing at these locations. For hot pit refueling pads see Table 3.3, Note 67.

3.13.4. Cargo Aircraft Separations. Parked explosives-loaded cargo aircraft is a storage function. Flightline personnel who solely support these aircraft, and all munitions maintenance activities are considered related. Other flightline facilities/activities which are related to combat aircraft or associated with other aircraft operations and maintenance will be separated by incremental K40/50, minimum fragment distances are not required. End of runway and dearm crew shelters do not require separation from explosives-loaded cargo aircraft. See Table 3.3, note 66.

3.13.5. Defensive Missile Battery Separation. The following criteria apply to deployed defensive missile batteries (e.g. Patriots) and associated support functions. See Table 3.3.

3.13.5.1. Missile batteries deployed in the IB clear zone of munitions storage area may be sited at K18 to manned functions considered related to area explosives operations. Likewise, missile batteries deployed in the clear zones of flightline operations may be sited at K18 to manned flightline facilities.

3.13.5.2 Those functions solely providing support to defensive missile units, such as motor pools, may be sited at K18 to batteries and other explosives activities when the missile battery is located in these areas.

3.13.5.3. No separation is required between missile batteries and the security force structures exclusively supporting them.

3.13.6. Facilities not Related. The following facilities are not considered “related” to any potential explosion site:

3.13.6.1. MWR facilities, except those exclusively used by flightline personnel.

3.13.6.2. Base civil engineering headquarters.

3.13.6.3. Central base supply.

3.13.6.4. Family housing, passenger terminals, and chapels.

3.13.6.5. Military billets, including permanent party dormitories, transient quarters, and other temporary billeting facilities, such as tent cities.

3.13.6.6. Commissaries, schools, and nurseries.

3.13.6.7. Wing and base headquarters, staff agencies (plans, manpower, safety, comptroller functions, etc).

3.13.6.8. Hospitals and dispensaries.

3.13.6.9. Theaters.

3.13.6.10. Main exchanges, except for flightline annexes.

3.13.6.11. Base fire departments, except for flightline fire stations.

3.13.6.12. Law enforcement and central security control.

★3.13.6.13. Hydrazine servicing facilities which support multiple bases.

3.14. Rocket Storage, Checkout, and Assembly (RSCA) Building. (Air Force Definitive Drawing 33-39-03) 3/8" steel doors must be installed to meet requirements.

3.14.1. As an ES, if the RSCA is used as an operating location, use IL from the PES it is supporting. For example, chaff and flare and argon recharging operations in the RSCA may be separated by IL from the combat aircraft they are supporting.

3.14.2. As a PES, each bay may singularly store physical capacity of HC/D 1.4, 100 lbs of HC/D 1.3 and 50 lbs of HC/D 1.2(04) with zero IM bay to bay and zero IL, PTR and IB. Use normal IM criteria to other PESs. If used as an operating location to support combat aircraft, apply IL to the same facilities/activities as in paragraph 3.13.3. When the RSCA is located outside of an explosives clear zone, licensing requirements apply. See paragraph 2.35.

3.15. Loading Docks used for Transferring Explosives. These loading docks are the same as aboveground storage magazines for Q-D purposes. Related ESs are the same as those in paragraph 3.13.2. When a loading dock is an integral part of an explosives facility, count explosives on the dock as part of the explosives content of the facility.

3.16. Railcars or Vehicles Spotted at Operating Buildings. Rail cars and vehicles should not be used as service magazines for operating buildings or locations. If such use is essential, park at intraline distance from the operation or operating building.

3.17. Vehicle Parking Areas.

★3.17.1. Government Owned Vehicle (GOV) Parking. GOV and powered Aerospace Ground Equipment (AGE) parking areas will be located at least 100 feet from explosives locations. Other motor pools normally require IB separations

because of office, workshops, and other inhabited areas. Temporary parking of GOVs, other than those being loaded or unloaded, will not be parked closer than 25 feet to any explosives facility. Temporary means the length of time for which the presence of the vehicle is essential to completion of a single task (e.g., a single work order number.) This restriction does not apply to approved operations inside hardened aircraft shelters. Local fire and safety officials will establish controls, as necessary, for licensed locations.

3.17.2. Privately Owned Vehicles (POV) Parking. Separate POV parking lots supporting multiple PESs by IL. When a POV parking lot supports a single PES it may be 100 foot minimum from its associated facility and IL from all other PESs. Parking areas for all other POVs should be located outside munitions storage areas and at least PTR distance from explosives locations. Minimum fragment distance applies except for POVs supporting a PES. Local fire and safety officials will establish controls, as necessary, for licensed locations.

3.17.3. War Reserve Materie (WRM) Vehicles Parking. Parking areas used exclusively for WRM vehicles will be sited at IL distances from explosives locations. PTR or IB separation distances should be used, when possible, to prevent unacceptable damage to critical war support vehicles and equipment.

★3.18. Warehouses. As a minimum, these facilities will be separated from explosives locations by the applicable unbarricaded, intermagazine distance. When the warehouse is used for non-munitions WRM (trailers, etc) use IL. Separation by PTR or IB distance should be used, when possible, to further limit damage or loss of assets.

3.19. Interservice Explosive Facilities. These operations will be sited according to paragraph 3.13.3. When the services disagree on the required safety distance, forward the problem through channels to HQ AFSC/SE for action.

3.20. Hardened Aircraft Shelters (HAS) and Flow-thru Revetments. Tables 3.12. and 3.13. show intershelter separation requirements that provide different levels of protection to meet different levels of risk. Table 3.3 shows separation requirements to other facilities.

★3.20.1. The separations shown in Table 3.12 provide reasonable assurance that aircraft in closed hardened shelters will remain operable should an explosion occur in an adjacent shelter or ready service storage facility. These aircraft may not be immediately removable due to debris. For shelters with third generation-type rear doors, the aircraft may be damaged substantially unless modifications have been made to prevent the rear doors from being blown against the aircraft. No facility occupied by personnel can be within 300 feet of a HAS (except 3rd generation) sited for more than 500 pounds NEW. For 500 pounds NEW or less, only the incremental frontal separations required by Table 3.3 apply. Facilities occupied by personnel will be no closer to 3rd generation HAS than the minimum distances specified in note 62 to Table 3.3.

3.20.2. The separations shown in Table 3.13. provide reasonable assurance that an explosion in one shelter or ready service storage facility will not propagate immediately to adjacent shelters, aircraft or ready service storage facilities. However, these adjacent structures, aircraft and stored munitions may be substantially damaged or destroyed. This is equivalent protection to that provided unsheltered aircraft separated by intermagazine distance (K6 or K11).

3.20.3. Use Table 3.12 to site new first, second, and third generation shelters. Separate existing first, second, and third generation shelters used to store munitions in peacetime from other shelters and ready service storage facilities according to Table 3.12. The MAJCOM commander may approve the use of the separations in Table 3.13. Use Table 3.13. to separate Korean TAB VEE and Flow-thru shelters and ready service storage facilities from other shelters and ready service facilities. The MAJCOM may establish procedures to allow use of the lesser separations in Table 3.13. to first, second, and third generation shelters during periods of increased readiness or during operational readiness exercises.

3.20.4. HASs used solely as permanent maintenance facilities would normally be classified as related facilities and require IL separation from supported PES (HAS containing combat configured aircraft, etc.). However, because TAB VEE and second and third generation HAS provide increased protection to equipment and personnel, the reduced separations shown in Table 3.12. are permitted with the following provisions:

3.20.4.1. Don't use the maintenance HAS for storage of explosives (except as permitted for a licensed facility per paragraph 2.35 or parking of explosives-loaded aircraft as defined in paragraph 3.25.4).

3.20.4.2. Keep the maintenance HAS doors closed (except for short periods to move equipment in and out, run aircraft engines, etc.) whenever the maintenance HAS is exposed to a PES capable of generating an overpressure of 3.5 psi or greater (normally K18 or less separation).

★3.20.4.3. The maintenance HAS is located no closer than 300 feet from any PES HAS (except for 3rd generation) sited for more than 500 pounds NEW. Separate maintenance HAS from 3rd generation PES HAS according to Table 3.12 and the minimum distances in note 62 of Table 3.3..

3.20.5. The following criteria apply to the listed munitions when loaded on sheltered aircraft or stored as additional loads in shelters.

3.20.5.1. Twenty and 30-millimeter (mm) ammunition is exempt from Q-D requirements if the shelter doors remain closed.

3.20.5.2. Class/division 1.3 and 1.4 munitions are exempt from Q-D requirements if the shelter doors remain closed. With the doors open, only the frontal separation required by paragraph 3.25.4 applies.

3.20.5.3. AIM-7, AIM-9, and AGM-65 missiles meeting the missile-to-missile separation requirements of paragraph 3.34. may use the separations in Table 3.14. For the AIM-7M with the WAU-17/B warhead, use Table 3.14. if no more than three warheads are in radial alignment. If necessary, store 20mm and 30mm ammunition with these missiles.

3.20.6. The side walls of the arch provide a shotgun effect that projects most hazardous fragments in a 30-degree cone. This cone applies to the front of a HAS as a PES only. Use Figure 3.4. to determine HAS exposure boundaries.

Table 3.12. Intershelter Separation Criteria for Aircraft Survival.

FROM / **PES** / **TO** / **ES**		TAB VEE or TAB VEE Modified (First Generation Aircraft Shelter)			Second or Third Generation Aircraft Shelter			Ready Service Igloo				Ready Service Magazine		Ready Service Module
		Side	Rear	Front	Side	Rear	Front	Side	Rear	Front Barri-caded	Front Unbar-ricaded	Barri-caded	Unbar-ricaded	Barri-caded
TAB VEE or TAB VEE Modified (1st Generation Aircraft Shelter)	Side	K9	K6	K9	K9	K6	K9	K2.75	K2.75	K8	K8	K8	K8	K8
	Rear	K8	K5	K8	K8	K5	K8	K2.75	K2.75	K8	K8	K8	K8	K8
	Front	K18	K18	K18	K18	K18	K18	K11	K9	K18	K18	K18	K18	K18
2nd or 3rd Generation Aircraft Shelter	Side	K9	K6	K9	K9	K6	K9	K2.75	K2.75	K8	K8	K8	K8	K8
	Rear	K8	K5	K8	K8	K5	K8	K2.75	K2.75	K8	K8	K8	K8	K8
	Front	K11	K9	K18	K11	K9	K18	K2.75	K2.75	K8	K8	K8	K8	K8
TAB VEE Maintenance HAS (See note)	Side	K9	K8	K9	K9	K8	K9	K8	K8	K8	K8	K8	K8	K8
	Rear	K8	K8	K8	K8	K8	K8	K8	K8	K8	K8	K8	K8	K8
	Front	K18	K18	K18	K18	K18	K18	K11	K9	K18	K18	K18	K18	K18
2nd or 3rd Generation Maintenance HAS (See Note)	Side	K9	K8	K9	K9	K8	K9	K8	K8	K8	K8	K8	K8	K8
	Rear	K8	K8	K8	K8	K8	K8	K8	K8	K8	K8	K8	K8	K8
	Front	K11	K9	K18	K11	K9	K18	K8	K8	K8	K8	K8	K8	K8

Note: Maintenance HAS cannot be located closer than 300 feet from any PES HAS sited for more than 500 pounds NEW.

★Table 3.13. Intershelter Separation Criteria To Prevent Simultaneous Detonation[6].

TO / FROM	PES	TAB VEE or TAB VEE Modified (First Generation Aircraft Shelter)[4]			Second or Third Generation Aircraft Shelter[4]			Korean TAB VEE[4]			Korean Flow thru[4]		Ready Service Igloo				Ready Service Magazine[5]		Ready Service Module[5]
ES		Side	Rear	Front	Side	Rear	Front	Side	Rear	Front	Side	Front & Rear	Side	Rear	Front Barri-caded	Front Unbar-ricaded	Barri-caded	Unbar-ricaded	Barri-caded
TAB VEE or TAB VEE Modified (First Generation Aircraft Shelter)	Side	K2	K2	K2.75	K2	K2	K2.75	K2	K2	K4.5	K2	K4.5	K1.25[1]	K1.25[1]	K2.75[2]	K2.75[2]	K2.75	K2.75	K2.75
	Rear	K2	K2	K2.75	K2	K2	K2.75	K2	K2	K4.5	K2	K4.5	K1.25[1]	K1.25[1]	K2.75[2]	K2.75[2]	K2.75	K2.75	K2.75
	Front	K6	K4.5	K8	K6	K4.5	K9[3]	K6	K4.5	K9[3]	K6	K9	K1.25[1]	K2.75[2]	K6[2]	K9[2]	K6	K9	K6
2nd or 3rd Generation Aircraft Shelter	Side	K2	K2	K2.75	K2	K2	K2.75	K2	K2	K4.5	K2	K4.5	K1.25[1]	K1.25[1]	K2.75[2]	K2.75[2]	K2.75	K2.75	K2.75
	Rear	K2	K2	K2.75	K2	K2	K2.75	K2	K2	K4.5	K2	K4.5	K1.25[1]	K1.25[1]	K2.75[2]	K2.75[2]	K2.75	K2.75	K2.75
	Front	K4.5	K2.75	K5	K4.5	K2.75	K6	K4.5	K2.75	K4.5	K4.5	K4.5	K1.25[1]	K1.25[1]	K2.75[2]	K2.75[2]	K2.75	K2.75	K2.75
Korean TAB VEE	Side	K2	K2	K2.75	K2	K2	K2.75	K2	K2	K4.5	K2	K4.5	K1.25[1]	K1.25[1]	K2.75[2]	K2.75[2]	K2.75	K2.75	K2.75
	Rear	K2	K2	K2.75	K2	K2	K2.75	K2	K2	K4.5	K2	K4.5	K1.25[1]	K1.25[1]	K2.75[2]	K2.75[2]	K2.75	K2.75	K2.75
	Front	K11[3]	K11[3]	K11[3]	K11[3]	K11[3]	K11[3]	K11[3]	K11[3]	K11[3]	K11[3]	K11[3]	K6[2]	K6[2]	K6[2]	K11[2]	K6	K11	K6
Korean Flow thru	Side	K2	K2	K2.75	K2	K2	K2.75	K2	K2	K4.5	K2	K4.5	K1.25[1]	K1.25[1]	K2.75[2]	K2.75[2]	K2.75	K2.75	K2.75
	Front & Rear	K11[3]	K11[3]	K11[3]	K11[3]	K11[3]	K11[3]	K11[3]	K11[3]	K11[3]	K11[3]	K11[3]	K6[2]	K6[2]	K6[2]	K11[2]	K6	K11	K6
Ready Service Igloo	Side	K2	K2	K2.75	K2	K2	K2.75	K2	K2	K2.75	K2	K2.75	K1.25[1]	K1.25[1]	K2.75[2]	K2.75[2]	K4	K4	K4.5
	Rear	K2	K2	K2.75	K2	K2	K2.75	K2	K2	K2.75	K2	K2.75	K1.25[1]	K1.25[1]	K2[2]	K2[2]	K4	K4	K1.25
	Front Barri-caded	K2.75	K2.75	K5	K2.75	K2.75	K6	K2.75	K2.75	K6	K2.75	K6	K2.75[2]	K2[2]	K6[2]	K6[2]	K6	K6	K6
	Front Unbarri caded	K6	K4.5	K8	K6	K4.5	K9	K6	K4.5	K9	K6	K9	K2.75[2]	K2[2]	K11[2]	K11[2]	K11	K11	K6
Ready Service Magazine	Barri-caded	K2.75	K2.75	K6	K2.75	K2.75	K6	K6	K6	K6	K6	K6	K4.5[2]	K4.5[2]	K6[2]	K6[2]	K6	K6	K6
	Unbarri caded	K11	K11	K11	K11	K11	K11	K11	K11	K11	K11	K11	K6[2]	K6[2]	K11[2]	K11[2]	K11	K11	K6
Ready Service Module	Barri-caded	K6	K4.5	K6	K6	K4.5	K6	K6	K6	K6	K6	K6	K1.25[2]	K1.25[2]	K6[2]	K6[2]	K6	K6	K1.1

NOTES:

1. Use K2.75 if the loading density of the igloo exceeds 0.6 pounds NEW per cubic foot of interior volume. Do not exceed the maximum NEW limit of 22,000 lbs.
2. If required, use the separation shown regardless of loading density. Do not exceed the maximum NEW limit of 22,000 lbs.
3. If required, use K6 if barricaded.
4. Do not exceed the maximum NEW limit of 11,000 lbs per shelter.
5. Do not exceed the maximum NEW limit of 22,000 lbs per PES.
6. For circumstances not covered in this table, refer to Table 3.3

Table 3.14. Separation Distances for Missiles in Aircraft Shelters.

Type of Aircraft Shelter		Intraline/Related Facility Distance (ft)				Public Traffic Route Distance (ft)				Inhabited Building Distance (ft)[7]			
		AIM-7	AIM-9	AGM-65A/B/D[9]		AIM-7	AIM-9	AGM-65A/B/D[9]		AIM-7	AIM-9	AGM-65A/B/D[9]	
				1/LAU	2-3/LAU			1/LAU	2-3/LAU			1/LAU	2-3/LAU
AB VEE and TAB	Front	50[1]	40[1]	80[1]	300[2]	90[4]	65[4]	240[4]	300[4]	150[8]	110[8]	400[5]	500[5]
VEE/Modified (First Generation	Side	0	0	0	300[2]	0	0	165[4]	300[2]	0	0	275[6]	395[3]
A/C Shelter	Rear	0	0	0	300[2]	0	0	105[4]	300[2]	0	0	175[6]	300[2]
Second and Third	Front	50[1]	40[1]	80[1]	300[2]	90[4]	65[4]	240[4]	300[4]	150[8]	110[8]	400[5]	500[5]
Generation Aircraft Shelter	Side	0	0	0	300[2]	0	0	165[4]	300[2]	0	0	275[6]	295[3]
	Rear	0	0	0	300[2]	0	0	105[4]	300[2]	0	0	175[6]	300[2]
Korean Flow Thru	Front & Rear	50[1]	40[1]	80[1]	300[2]	420[4]	240[4]	240[4]	300[4]	700[5]	400[5]	400[5]	500[5]
	Side	0	0	0	300[2]	0	0	165[4]	300[4]	0	0	275[6]	395[3]

NOTES:

1. Based on K18 for the NEW of one missile.
2. Based on minimum HAS fragment distance.
3. Based on K62 for NEW of 3 missiles per launcher. For 2 per launcher, use 345 feet.
4. Based on 60 percent of IBD.
5. Based on minimum fragment distance.
6. Based on K62 from the side or K40 from the rear.
7. Also applies to other facilities or locations requiring IB separation.
8. Base on K50 for the NEW of one missile. For AIM-7M with WAU-17 warhead, use 165 feet for a single warhead; use 165 feet for a single warhead; 205 feet for two warheads in radial alignment, and 235 feet for three warheads in radial alignment.
9. For AGM-65E/F/G use Table 3.22.

Figure 3.4. Hazard Zones for Hardened Aircraft Shelters and Igloos.

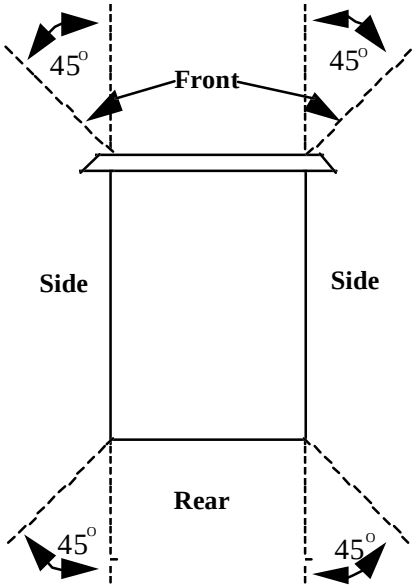

HAS as an Exposed Site (ES)

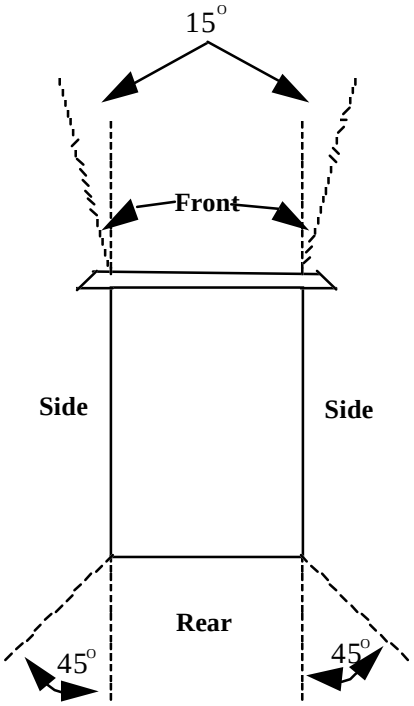

HAS as a Potential Explosion Site (PES)

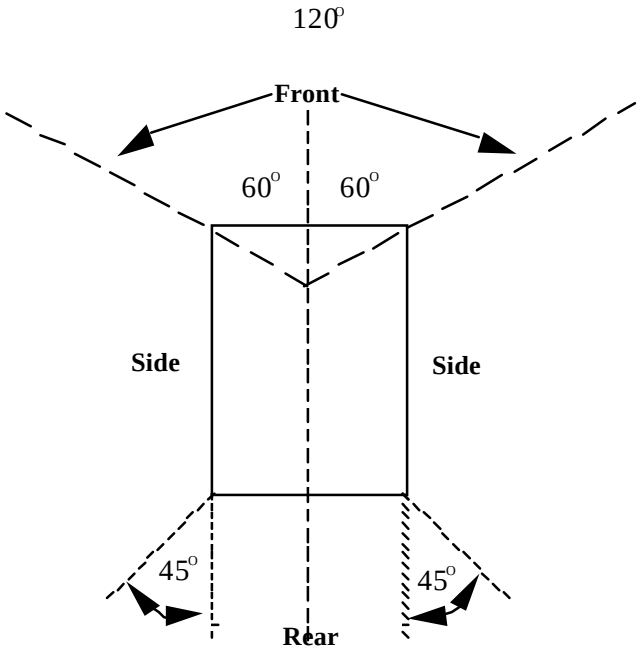

Igloo as an ES or PES

3.21. Munitions in Austere Areas. The following "austere area" provisions for explosives storage areas are authorized for use in:

3.21.1. All zones where hostilities exist.

3.21.2. Areas approved by PACAF, USAFE and USCENTAF, where arrangement under paragraph 1.4 will allow their application.

3.21.3. All "bare bases" and "limited bases."

3.21.4. Other areas as may be approved by HQ AFSC/SE.

3.21.5. Normal explosives safety standards, procedures, Q-D criteria, and methods of application in this regulation apply. The exceptions that follow are alternatives to normal criteria and may be used if necessary. Minimum separations should prevent simultaneous detonation of explosives on opposite sides of an approved barricade and minimize the possibility of later, non-simultaneous propagating explosions. Use greater separations where possible.

3.21.6. Open storage is authorized. Give priority for cover to items requiring protection from the elements, considering the type packing material involved.

3.21.7. Avoid single stacks of large quantities of mass-detonating explosives. Smaller stacks may limit losses due to accident or enemy action and often result in decreased land area requirement. Smaller stacks reduce the distance required between the explosives storage area and "outside" exposures, such as flightline areas, inhabited buildings, or bulk POL storage.

3.21.8. When normal aboveground magazine separation is not feasible, use the modular concept of barricaded open storage described in paragraph 3.22. Large quantities of explosives may be stored in this manner with relative safety.

3.21.9. If land is scarce and covered storage is required, consider the use of approved steel arch, earth-mounded igloos. These sectionalized, corrugated-arch structures allow storage of maximum amounts of mass-detonating explosives with minimum space between igloos. They are available in any practical length in widths up to 30 feet. The common earth cover gives acceptable protection against propagation of an explosion from one igloo to another.

3.21.10. Site tri-service or joint use storage facilities under the standard criteria. However, if operational requirements prescribe, austere area criteria apply to any part of the facility falling directly under Air Force control.

3.22. Module Description and Siting Criteria in Austere Areas. A module is a barricaded area comprised of a series of connected cells with hard surface storage pads separated from each other by barricades. See Figure 3.5.

3.22.1. A light metal shed or other lightweight fire retardant cover may be used for weather protection for individual cells. Heavy structures (reinforced concrete, dense masonry units) or flammable material will not be used.

3.22.2. The maximum NEW permitted to be stored within each cell is 250,000 Lbs.

3.22.3. Module cell to module cell separation is K1.1. This is a significant reduction from the K6 barricaded IM requirement. Modules allow the same amount of explosives to be stored using far less land space. However, in the event of an unplanned detonation in an adjacent cell, munitions will be covered with earth and unavailable for use until extensive uncovering operations and possibly maintenance are completed.

3.22.4. Barricades must comply with the appropriate requirements of this chapter. Module barricades must comply with the 2-degree rule in paragraph 3.12. Where possible use a 5^0 instead of a 2^0 angle. The line of sight between the tops of stacks must pass through at least 3 feet of earth.

3.22.5. To reduce the MCE expected from an explosion in one cell, "buffered" storage arrangements may be used as described in paragraph 3.36.

3.22.6. CBUs (HC/D 1.2), 20 and 30-mm ammunition, when stored in barricaded facilities, are exempt from meeting the two degree requirement of paragraph 3.12.

3.22.7. There is no restriction on the arrangement of cells within a module or groups of modules. When explosives stacks are not separated by a barricade, use K11.

3.22.8. An above ground magazine may be considered a module provided all standards applicable to modules are met.

3.23. Modular Storage Restrictions. The Q-D relief for using module storage is predicated on the measures taken to minimize the risk of fire and the throwing of firebrands in the event of an unplanned explosion.

3.23.1. Other than dunnage to support munitions containers, no wood or other flammable materials are allowed in a module.

3.23.2. Stocks are limited to HE bombs, (fuzed or unfuzed, with or without fins), class/division 1.1 ammunition and the following contained in nonflammable or metal shipping containers: 30mm and smaller ammunition, CBUs, inert munitions components, and hazard division 1.4 munitions.

3.23.3. Limit stocks in each module cell to one type of item in the standard shipping configuration unless mixed storage is authorized by the MAJCOM. (Mixed storage of high-explosive bombs and CBUs present an extreme fragment hazard and should be avoided.)

3.23.4. Combustible dunnage or other flammable material shall not be stored in or within 100 feet of modules.

Figure 3.5 Typical Eight Cell Module

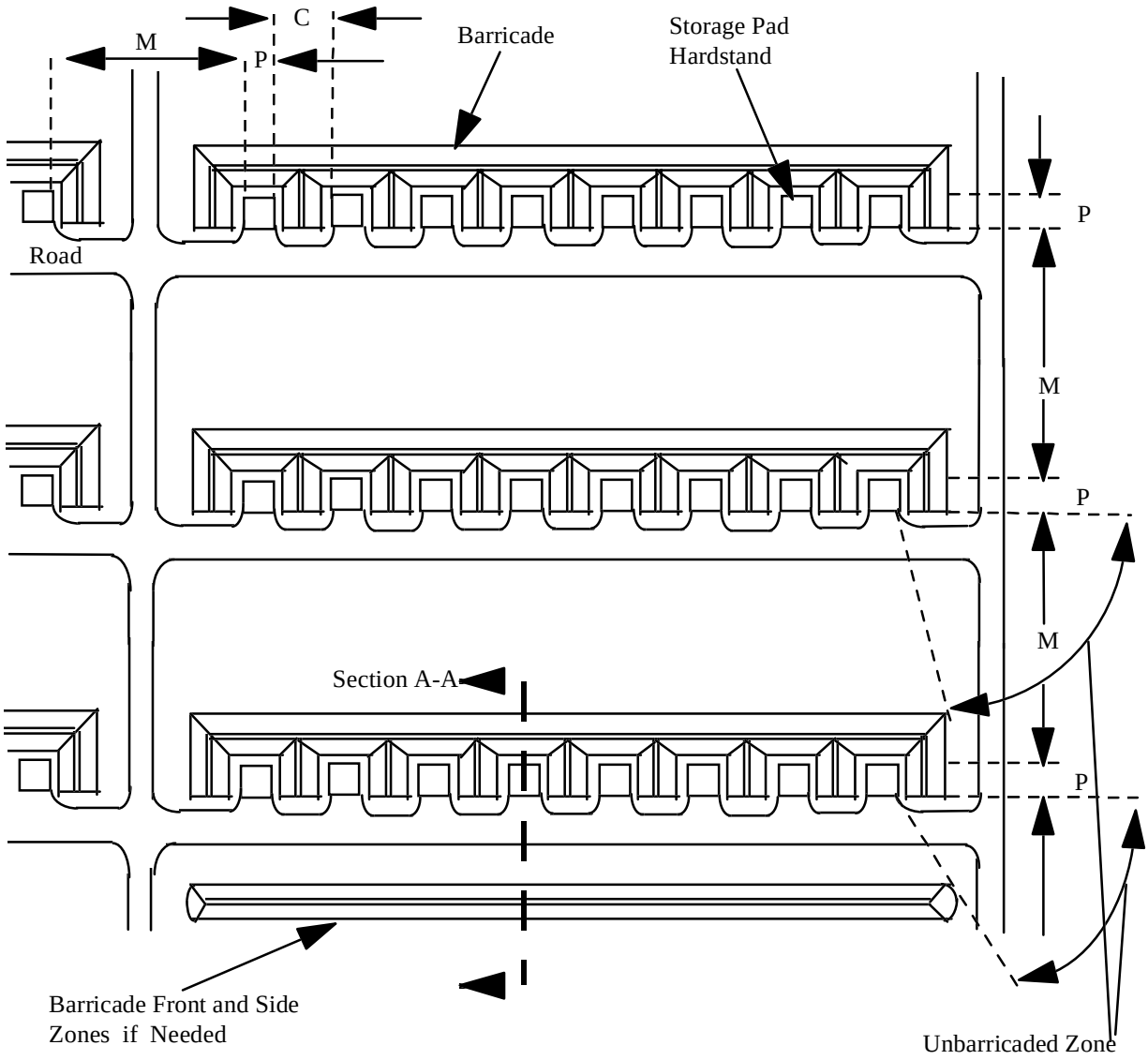

Typical Eight Cell Module
Number of Cells, Cell Explosives Weights,
Pad Size (P), and Distances Between Cells (C)
and Modules (M) Vary.

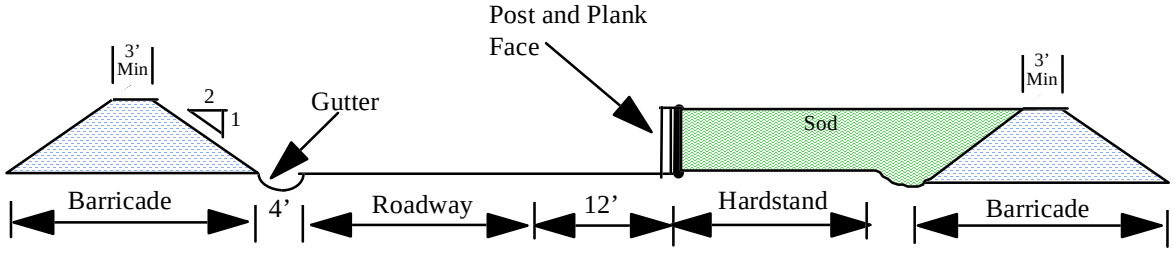

Section A-A

★3.24. Open Storage in Austere Areas. Comply with Table 3.3 except for separation between open storage sites, pads, and modules (above ground magazines), used solely for the storage of non-mass detonating CBUs in metal containers and/or 20mm and 30mm ammunition in metal containers. Such locations will be separated from each other by a minimum distance of 70 feet for a maximum of 500,000 pounds NEW. All other normal Q-D requirements apply.

3.25. Combat Aircraft, Explosives-Loaded Aircraft, Airfield Areas, and Related Support Facilities. Parked explosives-loaded aircraft must comply with minimum airfield criteria in AFI 32-1026, *Planning and Design of Airfields*. MAJCOMs may waive airfield criteria as stated in AFR 86-5, *Planning Criteria and Waivers for Airport Support Facilities*.

3.25.1. Forward Firing Munitions. Weapon systems such as guns, rockets, missiles, and flare dispensers pose an additional hazard because of their directional response and potential long range if inadvertently activated on the ground. Position aircraft to present the minimum hazard to personnel and resources in the event of a mishap. Don't unnecessarily stand or park vehicles in front of, or behind, these munitions when power is applied to the aircraft .

3.25.2. Airfield and Heliport Explosives-Prohibited Areas. Explosives, explosives facilities, and parked explosives-loaded aircraft must be excluded from the ground area under the approach-departure zone of all fixed and rotary wing aircraft landing facilities as follows. For fixed wing aircraft facilities, measure out to 10,800 feet from the point of beginning of the approach-departure zone. For rotary wing aircraft facilities, out to 1200 feet from the point of beginning of the approach-departure zone. Ground areas in zones on either side of runways and taxiways to the outer limits of the primary surface (lateral safety zones) described for the facility in AFI 32-1026, *Planning and Design of Airfields*.

3.25.3. Q-D separation requirements for explosives-loaded aircraft and related facilities are shown in Table 3.3.

★3.25.4. ***EXCEPTION:*** Combat aircraft configured only with the items listed below are exempt from intermagazine and intraline distance Q-D requirements to related facilities; IB and PTR distances still apply. Park in a designated combat aircraft parking area and treat as explosives-loaded aircraft in all other respects. This principle should give enough clearance to protect against the effects of an accidental detonation of a single item or a series of propagating explosions.

3.25.4. (AFRC) Provided QD standards are met, missiles on trailers may remain in alert hangars for periods not to exceed 8 hours. This authority will only be implemented during aircraft change-over and flying exercises.

3.25.4.1. Gun ammunition 30 mm or less of HC/D (04) 1.2.

3.25.4.2. HC/D 1.3. or 1.4. ammunition and explosives.

★3.25.5. *EXCEPTION: C*argo aircraft and transient combat aircraft containing only HC/D 1.4 ammunition or less than 100 pounds of HC/D 1.3 explosives are exempt from Q-D and do not require a site plan. Park in a designated aircraft parking area.

★3.25.6. To meet contingency requirements, MAJCOMs may authorize up to 600 pounds NEW of aircraft flares to be carried as Q-D exempt aircraft equipment. Distances between aircraft will be in accordance with the applicable airfield criteria. If contingency operations authorize closer distances between aircraft, use a 50 ft minimum for IM and 75 ft minimum IBD unless the separations used during contingency operations are greater. MAJCOMs will determine when and where this exception is applicable. They will also approve the packing configuration of these articles, plus the type of maintenance or other activity that will be permitted to take place on these aircraft**.**

3.26. Aircraft Battle Damage Repair Sites. The maximum NEW charge permitted is 2 ounces of HC/D 1.1. When using sandbags to cover charges and prevent fragment escape, a 300-foot clear zone is required. For unsandbagged charges, a 500-foot clear zone is necessary.

★3.27. Planned Detonation or Burns. The planned detonation or burning of explosives requires more stringent safety distances. If the minimum separation distance requirements for previously approved DDESB sitings or those prescribed in the subparagraphs below cannot be met, then personnel shall be provided equivalent protection. This equivalent protection may include, but is not limited to, the construction of barricades or other protective structures. Forward design information (including sketches, lists of materials to be used, and dimensions) or other proposed mitigation procedures through command channels to AFSC/SE for approval. If no equivalent protection can be put into effect, apply for the appropriate category of exception IAW Chapter 5 of this manual. Select and operate the destruction site based on the types of munitions involved and the criteria outlined below:

3.27.1. Disposal, demonstrations, and EOD Operations using detonation.

3.27.1.1. Use the following criteria from the detonation site for all locations involving personnel that are not essential to the planned detonation, also, for non-explosives related facilities, locations with exposed aircraft and open storage explosives sites.

3.27.1.1.1. K328 (1250 feet minimum) for nonfragmenting explosive materials.

3.27.1.1.2. K328 (2500 feet minimum) for fragmenting explosives.

3.27.1.1.3. K328 (4000 feet minimum) for bombs and projectiles with a caliber exceeding 5 inches. Heavy fragments such as the base plate and lugs may travel further than 4000 feet. These fragmenting munitions will be buried with a minimum of 4 feet of earth cover or double the required distance to ensure against fragment damage. (See para 3.27 above.)

3.27.1.2. Use the following criteria from the detonation site for all locations involving personnel that are essential to the planned detonation, as well as, for buildings or igloos storing explosives and above ground utilities.

3.27.1.2.1. K105 (500 feet minimum) for nonfragmenting explosive materials.

3.27.1.2.2. K105 (500 feet minimum) for fragmenting explosive materials. Provide a personnel shelter that offers fragment-proof overhead and frontal protection, or double the required distance to ensure against fragment damage.

3.27.1.2.3. If the minimum personnel protection distances from the detonation site are not available construct a personnel shelter that will provide protection from the expected psi and fragment hazards for the types of munitions used. Locate it at least 300 feet from the disposal site. Obtain shelter design approval from AFSC/SE prior to construction.

3.27.1.3. On-site authorities designate essential personnel and determine minimum distance for non-explosives facilities and equipment.

3.27.1.4. Control sites for planned detonations must be at least intraline distance from other PESs based on the PES NEW.

3.27.1.5. For underground utilities, a minimum protection factor of K18 (100 feet minimum) is required.

3.27.1.6. Withdraw non-essential personnel to a minimum of 500 feet for EOD operational incidents involving improvised explosive devices. On-scene authorities may expand this distance when situations warrant.

3.27.1.7. For quarry and building demolition operations, a minimum protection factor of K350 is required (TO 11A-1-66, *General Instructions--Demolitions*).

3.27.2. Disposal, demonstrations, and EOD Operations using burning**.**

3.27.2.1. Burning HC/D1.3 materials can generate significant internal pressures. Some HC/D 1.3 materials can undergo a transition from a deflagration to a detonation, in which case the effects are virtually identical to the detonation of conventional high explosives (HC/D 1.1).

3.27.2.2. From burning areas to all locations involving personnel that are not essential to the planned burn, or for non-explosives related facilities apply K40 (1,250 foot minimum). (NOTE: The minimum distance is 670 feet for NEW less than 100 pounds).

3.27.2.3. From burning areas to explosives operating locations not related to the burn and locations with exposed aircraft, apply incremental K40.

3.27.2.4. When powder trains or squibs are used to initiate a burn, apply incremental K24 from burning areas to all locations involving personnel that are essential to the planned burn, or facilities storing explosives and above ground utilities.

3.27.2.5. When blasting caps or other HC/D 1.1 explosives are used to initiate the burn, apply incremental K40 from burning areas to all locations involving personnel that are essential to the planned burn, facilities storing explosives and above ground utilities.

3.27.2.6. Use the NEW of the explosives at the burning area. Apply K18 from PESs to burning areas.

3.27.2.7. Control sites for planned burns must be at least intraline distance from other PESs based on the PES NEW.

3.27.2.8. Locate burning kettles at least 300 feet from inhabited buildings, public transport routes, and the base boundary. Separate from other explosives facilities by 300 feet or intraline distance, whichever is greater.

3.27.3. Static Test Firing Propellant Loaded Items

3.27.3.1. Using the total NEW of the propellant, site static test locations using incremental K40 distance to potential explosive sites and to locations where there are non-essential personnel and operations. Maintain a minimum of 50 feet from the non flame exposure area and 300feet from the flame exposure area to related non-explosive exposed sites, unless an engineer analysis shows a lesser distance is adequate. The flame exposure area is 45 degrees on either site of the flame exit nozzle or port.

3.27.3.2. Test authorities designate essential personnel. Provide these personnel with protection as required in paragraph 2.82.

★3.28. Explosive Ordnance Disposal (EOD) Training.

3.28.1. Proficiency Ranges. Because the quantity of explosives required to maintain EOD proficiency is small, criteria for an EOD training range are not as stringent as required for actual disposal operations. Limit EOD training ranges to a maximum of 5 pounds of demolition explosives (bare charges or charges without a fragment hazard, such as MK-series shaped charges). When siting these ranges, as an ES use as a minimum PTR distance from other PES based on the NEW of the other PESs. Construct and site as follows:

3.28.1.1 Locate the destruction point at least 500 feet from all other facilities (including public highways, base boundaries, runways, taxiways, parking aprons and any PES).

3.28.1.2. Construct a barricade within 10 feet of the destruction point to control ejection of debris. Make it the equivalent of two sandbags thick and at least 6 feet high.

3.28.1.3. The barricade must have two entrances (on opposite sides of enclosure), each with a barricade equivalent to two sandbags thick and long enough to effectively block all fragments and blast.

3.28.1.4. If the destruction point can't be at least 500 feet from facilities locate at 300 feet and limit to 2.5 pounds of demolition explosives, or 200 feet and 1.25 pounds.

3.28.1.5. If using the training range for operations that will produce fragments above the level expected for normal EOD proficiency training (normally open shots), meet the requirements of para 3.27 and TO 11A-1-42, Section I.

3.28.1.6. If EOD training is done using explosively operated tool kits, reduce range distance to 100 feet. Barricade and use only inert bombs and fuzes.

3.28.2. EOD proficiency ranges may be used for burning operations for cased ammunition if the following conditions are met:

3.28.2.1 Observe guidance provided in TO 11A-1-42 and this chapter to ensure personnel safety and fire prevention.

3.28.2.2. Barricade and cover pit, trench, and furnace operations to prevent fragment scatter.

3.28.2.3. Check environmental compliance and Resource Conservation and Recovery Act (RCRA) requirements and permits for this operation.

3.28.3. EOD personnel may use procedures with explosively propelled liquids, shots, gases, slugs, or heat at off-range locations on military installations in support of unit training, inspections, and evaluations. EOD teams may use the following tools.

3.28.3.1. MK 1 Remote Wrench.

3.28.3.2. MK 2 .50 Dearmer.

3.28.3.3. MK 31 Jet Remote Opening Device (JROD).

3.28.3.4. Improvised Dearmer.

3.28.3.5. MK 2/MK VIA Robotic Vehicle (with shotgun).

3.28.4. Procedures: Use only the explosives items listed below for off-range unit training inspection and evaluation operations. Quantities shown are the maximums authorized for each inspection or evaluation scenario.

3.28.4.1. Two .50 caliber impulse cartridges.

3.28.4.2. Two .50 caliber ball, M2 cartridges (projectile extracted).

3.28.4.3. Two electric or nonelectric blasting caps.

3.28.4.4. Six feet of detonating cord.

3.28.4.5. Thirteen feet of safety fuse.

3.28.4.6. Two M60 fuse lighters.

3.28.4.7. Three AN-M14 thermite grenades.

3.28.4.8. Five 12 gauge shotgun shells (*Note: Do not use 00 buckshot at off-range locations. When using # 7 1/2 shot, ensure a safe distance for shot travel*).

3.28.5. Authorized Operations. Under the following conditions, EOD personnel may conduct off-range operations using the tools, explosives, and procedures described in paragraph 3.28.4 without the use of barricades (see paragraph 3.28.1, for information on operations using barricades).

3.28.5.1. Make proper notifications concerning anticipated noise.

3.28.5.2. Do not locate the operation in an explosives prohibited zone.

3.28.5.3. Evacuate personnel to the applicable withdrawal distances required for an actual situation.

3.28.5.4. Place a minimum of three filled sand bags in front and behind tools that project slugs, fluids or shot to limit directional force.

3.28.5.5. Use only slugs made of plaster, which will disintegrate on impact

3.28.5.6. Select an area free of all fire hazards and use only inert training ordnance as a target.

3.28.5.7. When operating tool sets inside a building, take positive measures to prevent secondary or collateral damage.

★3.29. Petroleum, Oil, Lubricant (POL) and Hydrazine H-70 Facilities

3.29.1. Operating quantities of 500 gallons or less of POL or other hazardous material that support explosives operations do not require Q-D separation but will comply with National Fire Protection Association (NFPA) Standard 30, Flammable and Combustible Liquids Code.

3.29.2. Separate parking areas for fuel service trucks by IL distance. Parking area for fuel service trucks unrelated to the PES, use IBD.

3.29.3. There must be at least 100 feet between explosives and any mobile petroleum dispensing unit operating in an explosives area, except: where a shorter distance is needed during transfer operations to an underground tank located at less than 100 feet or where needed to refuel a mobile explosives transporter (such as the environmental control unit for the LGM-30) with the load aboard

3.29.4. Liquid petroleum (LP) gas tanks must meet the requirements of this section for like quantities of fuel and explosives of the various divisions.

3.29.5. Except for special situations described below, use Table 3.3 for separations from explosives locations or explosives loaded aircraft to more than 500 gallons of POL bulk storage, railroad tank car and railroad tank car transfer points/operations, tanks trucks, POL transmission pipelines, and hydrants. Fuel truck transfer points/operations may be separated by incremental (K24/30) PTR distance if the trucks are linited to less than 48 hours at the location. Keep pumps/pump houses serving underground POL at least 50 feet from explosives locations. If required fire distances in NFPA Standard 30 are greater than those in this manual, use the greater distance.

3.29.5.1. POL tanks that are on/above ground surface, are supplied by underground pipes, and service only an explosives operating area or multiple PESs of all types may be sited at incremental (K40/50) IBD, 400 feet minimum, from supported PESs. MAJCOM accepts possible loss or collateral damage if fragments puncture the tank and cause a fire.

3.29.5.2. Above or underground POL tanks servicing a single PES do not require Q-D separation but will comply with NFPA Standard 30.

3.29.5.2.1. The distance from an aboveground service tank to any other PES will be the larger of the required distance between the PES's or the appropriate NFPA fire protection distance.

3.29.5.2.2. The distance from an underground service tank to any other PES will be K3 with a minimum of 80 feet. The tank must meet NFPA Standard 30 for fire and construction. The tank top must be below the level of the heater room or equipment installation level unless antisiphoning devices are installed.

3.29.6. EXCEPTIONS: The following are exempted from Q-D requirements:

3.29.6.1. Explosives loaded aircraft to POL hydrants set on the flightline flush with the pavement.

3.29.6.2. Ammunition and explosives to in use materiel-handling equipment.

3.29.6.3. Licensed locations to POL facilities.

3.29.7. *EXCEPTIONS:* The following are exempted from Q-D requirements:

3.29.7.1. Explosives loaded aircraft to POL hydrants set on the flightline flush with the pavement.

3.29.7.2. Ammunition and explosives to in use materiel-handling equipment.

3.29.7.3. Licensed locations to POL facilities.

3.30. Liquid Propellants: General Information:

3.30.1. These criteria are minimum requirements for all Air Force installations where liquid propellants are present. This includes liquid and gaseous substances used for propulsion of missiles, rockets, and other related devices.

3.30.2. These criteria do not apply to:

3.30.2.1 Liquid propellant manufacturing facilities.

3.30.2.2. Prepackaged liquid propellant units when installed as components of weapon systems having assigned storage compatibility and explosives classifications.

3.30.2.3. A single, minimum-size standard shipping container of a given propellant. This container may be one 55-gallon drum or one 500-pound net weight cylinder. Such containers will be stored in the normal manner prescribed for the commodity.

3.30.2.4. One nonstandard container with lesser quantities than 3.30.2.3 above.

3.30.2.5. Hydrocarbons and other liquid fuels, or substances used as fuels or propellant, will be considered as propellants only when it is actually loaded into a missile system, rocket, ammunition or weapon subsystem.

3.30.3. When storage involves other explosives (solid) or explosive items, the Q-D criteria for those hazards, together with the criteria for the liquid propellant, will be used.

3.30.4. These criteria do not consider toxic hazards. If the toxic hazard is a controlling factor in siting and storing a liquid propellant, it should be considered along with explosives hazards when a site plan is prepared.

3.30.5. The MAJCOM developing a liquid propellant (or first adopting for use any liquid propellant not listed here) must recommend the hazard classification and compatibility group designation. The responsible MAJCOM will forward substantiated proposals for such assignments as soon as systems application planning allows or warrants to HQ AFSC/SE.

3.30.6. Determining the Propellant Quantity To Consider in Calculating Required Separation:

3.30.6.1. The NEW of a propellant is the total quantity of the propellant in a tank, drum, cylinder, or other container. When storage containers are not separated from each other by required distances, calculate the quantity of propellant on the basis of the total contents of all such storage containers. Propellant in related piping must be included to the point that positive means have been provided for interrupting the flow in the event of a mishap.

3.30.6.2. Where incompatible propellants are not separated by the required distances, or provisions are not made to prevent their mixing, the combined quantity of the two will be used. Consult Table 3.15 to see if high-explosives equivalents apply.

3.30.6.3. When quantities of propellants are given in gallons, Table 3.16 will be used to find the quantity in pounds.

3.30.7. Measuring Separation Distances to Exposures:

3.30.7.1. Measure the distance from the closest point of all hazard sources (containers, buildings, or positive cut-off points in piping). The source requiring the greatest distance will be the controlling factor. See 3.30.9.8 below for pipelines.

3.30.7.2. When buildings containing a propellant in cylinders or drums are effectively subdivided, measure distances from the nearest container or the separate subdivision of containers requiring the greatest separation.

3.30.8. Hazard and Compatibility Storage Groupings:

3.30.8.1. Liquid propellants may be hazards of various types and degrees (Table 3.17). The following groups are based on these hazards:

3.30.8.2. Group I. Relatively Low Fire Hazard (Table 3.18). These materials are the least hazardous. They have, or may develop, a fire hazard potential requiring some separation.

3.30.8.3. Group II. Fire Hazard (Table 3.18). These materials are strong oxidizers, subject to rapid combustion. When they come in contact with certain materials, such as organic matter, these propellants present a serious fire hazard. Therefore, storage facilities are prescribed, on the basis of quantities involved, to minimize property loss.
3.30.8.4. Group III. Fragment and Deflagration Hazard (Table 3.18). Storage containers of these materials may rupture in a fire or deflagration or there may be a vapor phase explosion. Either the pressure rupture or vapor phase explosion can cause a fragment hazard from the container, its protective structure, or adjacent material.
3.30.8.5. Group IV. Detonation Hazard (Table 3.19). These materials present the same hazard as mass-detonating explosives. They create air blast overpressure as well as severe fragment hazards from containers and surrounding equipment and material.

Table 3.15. Liquid Propellant TNT Equivalents.

Propellant Combinations (1)	Static Test Stands (2)	Range Launch (2)
LO_2/LH_2 or B_5H_9 + an oxidizer	60%	60%
LO_2/LH_2 + LO_2/RP-1	Sum of (60% for LO_2/LH_2)+ (10% for LO_2/RP-1)	Sum of (60% for LO_2/LH_2)+ (20% for LO_2/RP-1)
LO_2/RP-1 or LO_2/NH_3 or B 5 H_9 + a fuel	10%	20% up to 500,000 pounds plus 10% over 500,000 pounds
IRFNA/Aniline (3)(4)	10%	10%
IRFNA/UDMH (3) (4)	10%	10%
IRFNA/UDMH + JP-4 (3)(4)	10%	10%
N_2O_4/UDMH + N_2H_4 (3)(4)	5%	10%
N_2O_4/UDMH + N_2H_4 + solid propellants (3)(4)	5% plus the explosive equivalent of the solid propellants.	10% plus the explosive equivalent of the solid propellant.
Tetranitromethane (alone or in combination)	100%	100%
Nitromethane (alone or in combination)	100%	100%

NOTES:
1. Basis of the table. Developed by the Department of Defense Explosives Safety Board Work Group on Explosives Equivalents for Liquid Propellants. Tetranitromethane and nitromethane are Hazard Group IV propellants and are known to be detonable. The net weight of all nonnuclear mass-detonating explosives involved in any configuration, including components of nuclear items, will be added to the above equivalencies, where applicable, in determining required separations. See paragraph 3.30.5 concerning equivalents for combinations other than shown above.
2. The percentage factors used for the explosives equivalencies of propellant mixtures at launch pads and static test stands were based on such propellants located aboveground and unconfined except for their tankage. Other configurations will be considered on an individual basis to determine applicable equivalencies. MAJCOMs concerned will submit substantiated recommendations to HQ AFSC/SE, together with, or in the same manner as, site plans for new facilities under chap 4.
3. These are hypergolic combinations. (Fuel and oxidizers that will ignite with each other.)
4. Substitutions. Alcohols or other hydrocarbons substitute for RP-1; H_2O_2, F, BrF_5, CLF_3, OF_2, or O_3F_3 substituted for LO_2, Monomethylhydrazine substituted for hydrazine or unsymmetrical dimethylhydrazine (UDMH), or ammonia substituted for any fuel where hypergolic combination results.

Table 3.16. Factors For Converting Gallons of Propellant into Pounds.

Item	Pounds per Gallon	At Temperature oF
Anhydrous ammonia	5.1	68
Aniline	8.5	68
Bromine pentafluoride	20.7	68
Chlorine trifluoride	15.3	68
Ethyl alcohol	6.6	68
Ethylene oxide	7.3	68
Fluorine (liquid)	12.6	-306
Furfuryl alcohol	9.4	68
Hydrocarbon fuel JP-4	6.35	60
Hydrocarbon fuel JP-5	6.84	60
Hydrogen peroxide (90 percent)	11.	68
Hydrazine	8.4	68
Isopropyl alcohol	6.6	68
Liquid hydrogen	0.59	-423
Liquid oxygen	9.	-297
Methyl alcohol	6.6	68
Mono methyl hydrazine	7.3	68
Monopropellant NOS-58-6	9.46	68
Nitromethane	9.5	68
Nitrogen tetroxide	12.1	68
Otto fuel	10.5	77
Oxygen difluoride	12.7	-229
Ozone difluoride	14.6	-297
Pentaborane	5.2	68
Perchloryl fluoride	12.0	68
Red fuming nitric acid (IRFNA)	12.5	68
RP-1	6.8	68
Tetranitromethane	13.6	78
Triethyl Boron B	5.8	73
UDMH	6.6	68
UDMH/hydrazine	7.5	68

Table 3.17. Propellant Hazards and Compatibility Groups.

Propellant	Hazard Group (1)	Storage Group (2)
Alcohols CH_3OH, C_2H_5OH, $(CH_3)_2CHOH$	I	C
Anhydrous Ammonia NH_3	I	C
Aniline $C_6H_5NH_2$	I	C
Hydrocarbon Fuels JP-4, JP-5, RP-1	I	C
Monopropellant NOS-58-6	I	C
Nitrogen Tetroxide N_2O_4	I	A
Otto Fuel II	I	G
Red Fuming Nitric Acid HNO_3	I	A
Bromine Pentafluoride BrF_5	I I	A
Chlorine Trifluoride ClF_3	I I	A
Hydrogen Peroxide Greater than 52% H_2O_2	I I (3)	A
Liquid Fluorine LF_2	I I	A
Liquid Oxygen LO_2	I I	A
Perchloryl Fluoride CLO_3F	I I	A
Oxygen Difluoride OF_2	I I	A
Ozone Difluoride O_3F_2	I I	A
Ethylene Oxide C_2H_4O	I I I	D
Hydrazine N_2H_4	I I I	C
Hydrazine-UDMH Mixtures	I I I	C
Liquid Hydrogen LH_2	I I I	C
Mixed Amine Fuels	I I I	C
Monomethylhydrazine CH_3NHNH_3	I I I	C
Pentaborane B_5H_9	I I I	D
Triethyl Boron $B(C_2H_5)_3$	I	D
UDMH $(CH_3)_2NNH_2$	I I I	C
Nitromethane CH_3NO_2	IV (4)	F
Tetranitromethane $C(NO_2)_4$	IV	F

NOTES:

1. The toxic hazard may be an overriding consideration. Consult Bio-environmental personnel to determine toxicity and safety requirements.
2. If the propellants can be stored together without increasing the hazards, they are assigned the same compatibility group letter. Propellants with unlike letters are incompatible for storage. The prefix "Liq" is used here to distinguish liquid propellant groups from the groups listed in paragraph 2.42. Do not mix liquid compatibility storage groups with other explosives storage groups. Groups F and G have been added.
3. Under certain conditions, concentrated hydrogen peroxide greater than 74 percent can detonate.
4. Although nitromethane is chemically compatible with Liq-C propellants, it is assigned to a separate group because of explosives hazard differences. Group F has been added to provide the required degree of safety under the circumstances.

3.30.9. Since the hazards differ in each of the above groups, the predominant hazard of a propellant can vary with the storage location and the operation involved. In determining safety criteria and separation distances, consider the following conditions:

3.30.9.1. Range Launch Pads. Range launch pads involve research, development, test, and space exploration launches. The closeness of fuel and oxidizer to each other makes these operations hazardous. Launch vehicle tanks are also involved. High-explosives equivalents must be used.

3.30.9.2. Operational Launch Pads. Activities at operational launch pads are similar to those at range launch pads. Launch vehicle tanks are involved at these locations. High-explosives equivalents must be used for all quantities of incompatible propellants that could possibly become mixed in the event of a mishap. When an operational launch pad is used for training launches, it will be considered a range launch pad.

3.30.9.3. Static Test Stands. These units remain static and are subject to better control than obtainable in paragraphs 3.30.9.1 and 3.30.9.2 above. To reduce the hazard related to rockets or missiles on launch pads, tanks may be separated (except fuel and oxidizer tanks that are mounted one above the other). High-explosives equivalents must be used for all

quantities of incompatible propellant that could possibly become mixed in the event of a mishap. The hazards from properly separated "run tanks" (operating tanks) and piping are generally the hazards for the materials they contain. This does not apply if the materials are incompatible and may become mixed. If the materials are subject to mixing, use high-explosives equivalents.

3.30.9.4. Ready Storage. This storage is close to launch and static test stands, but it is not usually directly involved in feeding the engine. If the facility is designed to prevent mixing fuels and oxidizers or initiation of a detonation in or on nearby facilities, it presents Group I through III hazards. However, if positive measures cannot be taken to prevent mixing of fuel and oxidizer or to prevent the propagation of a detonation, use high-explosives equivalents.

3.30.9.5. Cold-Flow Test Operations. These present only fire and fragment hazards if the system is airtight, fuels and oxidizers are never employed concurrently, each commodity has a completely separate isolated system and fittings to positively prevent intermixing, and the propellants are of required purity. Otherwise, use high-explosives equivalents.

3.30.9.6. Bulk Storage. This is the most remote storage. It is never directly connected to any launch or test operation. It consists of the area, tanks, and other containers. It includes the tanks and containers used to hold propellant for supplying ready storage and, indirectly, run tanks where no ready storage is available. It generally presents fragment hazards. However, if positive measures cannot be taken to prevent mixing of fuel and oxidizer or to prevent propagation of a detonation, use high-explosives equivalents.

3.30.9.7. Rest Storage. This resembles bulk storage. It is a temporary parking location for barges, trailers, tank cars, and portable tanks used for topping operations (when not engaged in topping operations). It includes parking locations for such vehicles when they are unable to empty their cargo promptly into proper storage containers. Fire and fragment hazards govern. A transporting vehicle becomes a part of the storage container to which it is attached during propellant transfer.

3.30.9.8. Transfer Pipelines. These present minimum hazards when used to transfer Group I through III propellants between unloading points and storage areas or between storage areas and points of use. Group IV material is generally too hazardous to be moved any significant distance through such lines. Short fill, drain, or feeder lines that are part of a system are not considered "transfer pipelines" within the meaning of this paragraph. The following apply to transfer pipelines:

Group I. No minimum Q-D has been set up. Give normal fire protection for each pipeline site.

Groups II and III. Keep at least 25 feet between the pipeline and inhabited buildings. Give normal fire protection for each pipeline site. Group IV. Generally considered too hazardous to transport by pipeline. However, if the line is designed to carry the material, apply the criteria in Table 3.18 to each part of the line not covered by the safety radius formed by applying the principles in 3.30.9.3. above.

3.30.9.9. Liquid propellants used for propulsion or operation of missiles, rockets, and other related devices are assigned to hazard groups and compatibility storage groups.

3.30.10. Tables of Distances:

3.30.10.1. Group I. Relatively Low Fire Hazard. Table 3.18 applies.

3.30.10.2. Group II. Fire Hazard. Table 3.18 applies.

3.30.10.3. Group III. Fragment and Deflagration Hazard. Table 3.18 applies.

3.30.10.4. Groups I, II, and III. When Groups I, II, and III materials are stored with more hazardous materials under conditions described in 3.30.9 above, tables 3.10 and 3.14 apply, as appropriate.

3.30.10.5. Group IV. Detonation Hazard (100 percent high-explosives equivalent). Paragraph 3.13 applies.

3.30.10.6. Compatible Storage. Separation distance between stored quantities of different propellants of the same compatibility storage group will be determined as follows:

3.30.10.6.1. For propellants of the same hazard group, use the distance given in the intragroup/intraline column of the applicable Table 3.18 for the largest quantity of propellant involved.

3.30.10.6.2 For propellants of different hazard groups, based on each quantity of propellant involved, determine the distance given in the intragroup/intraline column of the applicable table for each hazard class. Use the greatest distance.

3.30.11. Incompatible Storage:

3.30.11.1. When propellants are of different compatibility groups, use the greatest IB distance. EXCEPTION: If propellants are subdivided by barriers, or other means to prevent mixing in the event of a mishap, determine the minimum separation as in 3.30.10.6 or 3.30.10.6.1 above, as applicable.

3.30.11.2. Minimum separation between quantities of hazard Groups I through IV and the various "divisions" of other explosives will be the distances prescribed for POL in paragraph 3.29. Use Table 3.3 for the division of explosives involved. If more than one division is involved, use the distance for the greatest separation.

Table 3.18. Quantity-Distance for Propellants.[9]

Pounds of Propellant		Hazard Group 1		Hazard Group II		Hazard Group III		
		IB, PTR, & Incompatible Group I [2,4,10]	Intra-group IL[1] Group I [5]	IB, PTR, & Incompatible Group II [2,6,10]	Intra-group IL [1] & Group II [7]	IB, PTR & Incompatible Group III [2,10]		Intra-group IL [1] & Group III [11]
Over	Not Over					Unprotected [9]	Protected [8, 10]	
0	100	30	25	60	30	600	80	30
100	200	35	30	75	35	600	100	35
200	300	40	35	85	40	600	110	40
300	400	45	35	90	45	600	120	45
400	500	50	40	100	50	600	130	50
500	600	50	40	100	50	600	135	50
600	700	55	40	105	55	600	140	55
700	800	55	45	110	55	600	145	55
800	900	60	45	115	60	600	150	60
900	1000	60	45	120	60	600	150	60
1000	2000	65	50	130	65	600	175	65
2000	3000	70	55	145	70	600	190	70
3000	4000	75	55	150	75	600	200	75
4000	5000	80	60	160	80	600	210	80
5000	6000	80	60	165	80	600	220	80
6000	7000	85	65	170	85	600	225	85
7000	8000	85	65	175	85	600	230	85
8000	9000	90	70	175	90	600	235	90
9000	10000	90	70	180	90	600	240	90
10000	15000	95	75	195	95	1200	260	95
15000	20000	100	80	205	100	1200	275	100
20000	25000	105	80	215	105	1200	285	105
25000	30000	110	85	220	110	1200	295	110
30000	35000	110	85	225	110	1200	300	110
35000	40000	115	85	230	115	1200	310	115
40000	45000	120	90	235	120	1200	315	120
45000	50000	120	90	240	120	1200	320	120
50000	60000	125	95	250	125	1200	320	125
60000	70000	130	95	255	130	1200	340	130
70000	80000	130	100	260	130	1200	350	130
80000	90000	135	100	265	135	1200	360	135
90000	100000	135	150	270	135	1200	365	135
100000	125000	140	110	285	140	1200	380	140
125000	150000	145	110	295	145	1800	395	145
150000	175000	150	115	305	150	1800	405	150
175000	200000	155	115	310	155	1800	415	155
200000	250000	160	120	320	160	1800	425	160
250000	300000	165	125	330	165	1800	440	165
300000	350000	170	130	340	170	1800	455	170
350000	400000	175	130	350	175	1800	465	175
400000	450000	180	135	355	180	1800	475	180
450000	500000	180	135	360	180	1800	485	180
500000	600000	185	140	375	185	1800	500	185
600000	700000	190	145	385	190	1800	515	190
700000	800000	195	150	395	195	1800	530	195
800000	900000	200	150	405	200	1800	540	200
900000	1000000	205	155	410	205	1800	550	205
1000000	2000000	235	175	470	235	1800	630	235
2000000	3000000	255	190	505	255	1800	675	255
3000000	4000000	265	200	535	265	1800	710	265
4000000	5000000	275	210	555	275	1800	740	275
5000000	6000000	285	215	570	285	1800	760	285
6000000	7000000	295	220	585	295	1800	780	295
7000000	8000000	300	225	600	300	1800	800	300
8000000	9000000	305	230	610	305	1800	815	305
9000000	10000000 (3)	310	235	620	310	1800	830	310

NOTES:

1. See Paragraph 3.30.2.3 and 3.30.2.4.
2. See Paragraph 3.30.11.
3. Extrapolations above 1,000,000 lbs extend well outside data included in the Bureau of Mines report from which original Q-D tables were derived; however, they are supported by independent calculations and knowledge of like phenomena.
4. Values are one-half of the Group II inhabited building distance.
5. Values are three-fourths the Group II and Group III intragroup distances.
6. Distances were selected as three-fourths the Group III inhabited building distance and considered reasonable due to the lesser hazard.
7. Distances were derived from the Bureau of Mines, Department of the Interior Report No. 5707, dated 1961, modified and expanded. They average 37.5 percent of the inhabited building distances given in this report.
8. The term "protected" means that protection from fragments is provided by terrain, effective barricades, nets, or other physical means.
9. Distances are necessary to provide reasonable protection from fragments of tanks or equipment that are expected to be thrown in event of a vapor phase explosion.
10. Distances are the recommended inhabited building distances given in the Bureau of Mines, Department of the Interior Report No. 5707, dated 1961, and extrapolation thereof (2 cal/cm 2 on 1 percent water vapor curve).
11. Distances are an average of 37.5 percent of "protected" column.

Table 3.19. Hazard Group IV Separation Distances.

Quantity of Propellant/Explosives	Distance in Feet from Propellant/Explosive Hazard		
Total Weight Gp IV Propellant or H.E. Equivalents for other Propellants/Explosives See Table 3.15 (1) in pounds	To Inhabited Buildings	To Public Traffic Routes	Intraline (2)
	Use Table 3.6, K40/50 Column. 1250' Min	Use Table 3.6, K24/30 Column. 750' Min	Use Table 3.6 K18 Column

NOTES:

1. Distances must be increased, where required, to provide proper protection for all additional mass-detonating explosives (nonnuclear material) and all added solid propellants involved in the system or operation, as follows:
   a. Use the net weight of all mass-detonating explosives involved in any configuration, including high-explosive
   b. Use the applicable high-explosives equivalent assigned to all solid propellant motors involved.
   c. The required separation distance will be determined by using the sum of the high-explosives values of the liquid propellants and other explosives involved, on the basis of a and b above. Do not determine the distances for each explosive element separately and then add these distances together.
2. Distances less than intraline are not applicable to the propellants and situations covered by this table.

Section D--Applying Q-D Principles to Specific Weapons Systems and Special Storage Configurations.

3.31. General information. This section expands the general quantity-distance (Q-D) principles and applies those principles to specific situations where testing has been conducted. These tests provided information to establish specific separation distances. Criteria is provided for weapons systems or special storage configurations that have been tested, or where an analysis has been performed, to verify special Q-D criteria.
3.31.1. In many cases the use of these criteria requires that certain configurations or situations exist before the reduction can be applied. If these requirements are not adhered to, calculate the total net explosives weight (NEW) of explosives present, and use the criteria in Table 3.3 to determine Q-D separations.

★3.32. LGM-30 (Minuteman). Use the following high explosives equivalency for the LGM-30 missile while calculating Q-D separations.
3.32.1. Individual LGM-30F Minuteman motors equivalencies are:

Table 3.20. Minuteman TNT Equivalencies.

Stage	HC/D	NEW	TNT Factor	TNT Equiv
I (F&G)	1.3	45,800	NA	NA
I (F&G)	1.3	45,800	.035	1600(1)
II (F&G)	1.3	13,680	NA	NA
II (F&G)	1.3	13,680	.152	2100(1)
III (F)	1.1	3671	1.01	3700(1)
III (G)	1.3	7281	NA	NA
III (G)	1.3	7281	.506	3700(1)

Note: 1. These equivalencies apply to LGM 30 Minuteman motors, whether assembled into a set or stored/handled separately, when a HC/D 1.1 initiator is present.

3.32.2. Calculate NEW for motor sets (Stages I, II, and III), assembled or unassembled, with HC/D 1.1 material, on HC/D 1.1 equivalency basis unless the 1.3 hazard is greater.
3.32.3. When only HC/D 1.3 motors are present, use total NEW of the motors, and apply HC/D 1.3 Q-D criteria. For LGM-30G motors use class/division 1.3 Q-D criteria for shipping and storage purposes. When a warhead is added to the assembled set, the 7400-pound high explosives equivalency applies. Safety distances are based on 7400 pounds HC/D 1.1 high explosive equivalency for all LGM-30 missile motor sets (models A through G) with or without a warhead installed. IB distances are 1570 feet from buildings of public assembly and 1200 feet from all other inhabited buildings.
3.32.4 Separations for aircraft loading and unloading sites for solid propellant motors in shipping and storage containers, Ballistic Missile Containers (SSCBM) and Payload Transporter Container:
3.32.4.1 IB distance is 1200 feet (includes missile holding pads, facilities, aircraft or other equipment essential to the mission of the base; PTR is 720 feet.
3.32.5. Aircraft Loading and Unloading Sites. When an aircraft loaded with these motors must be refueled, a fully staffed fire fighting truck will be on standby at the aircraft during fueling operations.
3.32.6 Railroad Loading and Unloading Sites**.** Criteria in paragraph 2.76.18 apply to railroad loading and unloading sites for Minuteman missile motors in the SSCBM and missile transporters shipped by the “piggyback” method.
3.32.7. Missile Alert Facility (MAF). Explosives-loaded vehicles (payload transporter, reentry vehicle guidance and control van, transporter erector) may be temporarily parked at the MAF, subject to the following controls:
3.32.7.1. Each instance must be approved by the wing/installation commander or his designated representative.
3.32.7.2. Allow parking if needed for severe weather, equipment breakdown and repair, crew rest, darkness (where state law prohibits vehicle travel on highways after dark) or other emergency conditions.
3.32.7.3. No smoking outside missile alert facility support buildings.
3.32.7.4. Park only one explosives-loaded vehicle.
3.32.7.5. Publish a detailed operating instruction of safety precautions and controls.
3.32.7.6. Ensure required security is maintained..

★3.33. LGM-118 (Peacekeeper). Use the following high explosives equivalency for the LGM-118 missile while calculating Q-D separations.
3.33.1 Peacekeeper Separation. General explosives safety standards and Q-D criteria apply to the Peacekeeper except as outlined below:
3.33.1.1 When stages 1, 2, and 3 are assembled at other than a silo launch facility (with or without stage 4 warheads being attached), the net explosives equivalency for the missile is 203,412 pounds, class/division 1.1.

3.33.2 When the missile is in a silo launch facility or during missile installation or removal from the silo, the net explosives equivalency is 20,000 pounds, class/division 1.1. This equivalency is to be used only for calculating intermagazine and intraline separations, and for use in risk assessments based on blast overpressure. Applicable distance for PTR is 1,050 feet and for IB, 1,750 feet.

Table 3.21. Peacekeeper TNT Equivalencies.

Stage	HC/D	NEW	TNT Factor	TNT Equiv
I	1.3	99,133	NA	NA
I	1.3	99,133	1.20	118960(1)
II	1.3	54,120	NA	NA
II	1.3	54,120	1.20	64,944(1)
III	1.1	15,606	1.25	19,508(1)

Note: 1. These equivalencies apply to Peacekeeper motors, whether assembled into a set or stored/handled separately, when a HC/D 1.1 initiator is present. When stage III's are stored only with other stage III's, the HC/D 1.1 NEW versus TNT equivalency may be used.

3.34. Tactical Missile Separations:

3.34.1. AIM-7 Missile (Other than WAU-17 Warhead). When these conditions are met MCE is limited to a single AIM-7 warhead with an HC/D of (07)1.1.

3.34.1.1 Separate warheads of adjacent AIM-7 missiles by 5 inches or more.

3.34.1.2. Separate AIM-7 warheads from all AIM-9 warheads by at least 22 inches.

3.34.1.3. Or, warheads are not radially aligned.

3.34.2. AIM-7 Missiles (Other than WAU-17 Warhead) in Containers. AIM-7 missiles that explode in an all up round container (AURC) will not propagate to warheads in adjacent containers, either vertically or horizontally. MCE is limited to four warheads.

3.34.3. AIM-7 Missiles With WAU-17 Warhead in an AURC. All missiles in an AURC will sympathetically detonate, therefore the MCE is 36 x 4 or 144 pounds.

3.34.3.1. These warheads can sympathetically detonate other class/division 1.1 explosives in radial alignment of the warhead.

NOTE: Until actual testing is completed, use radial aligned separation distance of 100 inches. (8'4") to prevent propagation of one warhead to another.

3.34.3.2. Detonation of warheads in an AURC will not transfer to adjacent containers side-by-side, but containers within a single vertical stack must be alternated, nose-to-tail, to prevent propagation vertically. MCE would then be four warheads.

★3.34.4. When AIM-7 missiles (with WAU-17) are in the open, the hazardous fragment distance (IBD) varies with the number of warheads in radial alignment and at less than 100 inches as follows:

# Warheads	IBD
(Up to) 4	400
5	500
8	620

3.34.5. When AIM-7 missiles (with WAU-17) have an MCE that exceeds 100 pounds, the IBD is 1250 feet. For example one AURC (144 pounds) in a maintenance facility would have an IBD of 1250 feet.

3.34.6. AIM-9 Missiles. A warhead detonation will not cause sympathetic detonation of adjacent AIM-9 missiles provided warheads are separated by 22 inches or more, or warheads are not radially aligned. If these conditions are met, MCE is limited to a single AIM-9 warhead. AIM-9 missiles that detonate in AUR containers will not propagate to any adjacent container either vertically or horizontally. MCE is limited to four warheads.

3.34.7. AGM-65 Missiles. Explosives weights of individual AGM-65 missiles or loaded launchers need not be added together if adjacent missiles or launchers are separated by at least 130 inches and the nose of any AGM-65 missile does not point at any other missile.

3.34.8. AGM-88 Hi-Speed Antiradiation Missile (HARM). For storage and transportation in AUR container, missiles are assigned hazard class/division (04)1.2. Out of container, missiles are assigned hazard class/division (04)1.1. A warhead detonation will not cause sympathetic detonation of adjacent war heads if they are separated by at least 6 inches, or if the warheads are not radially aligned.

3.34.9. AIM-120 Advanced Medium Range Air-to-Air Missile (AMRAAM). For storage and transportation in AUR container, missiles are assigned hazard class/division (08)1.2. NEW is 116 pounds per AUR container (with four missiles).

Out of container, missiles are assigned hazard class/division 1.1, with a hazardous fragment distance of 500 feet for one missile. For missiles out of container and with radially aligned warheads at less than 100 inches of separation, the following IBD applies:

3.34.10. Mixed Trailer Loads. Use criteria in paragraph 3.34 and configurations shown in TO 11-1-38, *Positioning and Tie-Down Procedures--Nonnuclear Munitions*, to determine MCE

# Warheads	IBD
2	600
3	650
4	700
8	800

NOTE: Interpolate distances for quantities between or over those listed above.

★**3.35. Aircraft Criteria.** Unless otherwise specified, aircraft loaded with explosives and munitions will be considered an above ground magazine. For Q-D purposes, do not combine explosives considered part of aircrew survival equipment. See paragraph 3.25.4 for procedures on other Q-D exempt ordnance.

3.35.1. For B-52 aircraft with certain approved nuclear weapons loads (internal load only), authorized IBD is 760 feet and PTR is 460 feet with and NEW of 400 lbs HC/D 1.1 explosives.

3.35.2. F-15 aircraft with AIM/AGM Series Missiles. See Figure 3.7.

3.35.3. F-16 aircraft with AIM/AGM Series Missiles. See Figure 3.8.

3.35.4. Other aircraft configurations may be approved periodically. Contact MAJCOMs for the most current guidelines.

3.36. Buffered Storage Concept. Under certain conditions, propagation can be prevented between stacks of tritonal-filled MK-82 and MK-84 bombs. NEW for Q-D purposes is the explosives weight of the largest stack plus explosives weight of intervening buffer material. Buffered storage can be used in earth covered magazines, aboveground magazines, or open stacks.

3.36.1. Stacks are limited to 64 MK84 or 312 MK82 bombs. Combined stacks are limited to 60,500 pounds NEW.

3.36.2. Acceptable buffer materials are: palletized 20mm ammunition, palletized 30mm ammunition, or CBU-58s packaged two per metal container.

3.36.3. Units wanting to use different configurations or buffer materials must submit definitive drawings through the MAJCOM to AFSC/SE for approval. These new buffers will consist of HC/D 1.2, 1.4 or inert materials which have an aerial density of 500 pounds per square foot. For bomb stacks less than 24,000 pounds, an aerial density of 250 pounds per square foot is acceptable.

3.36.4. Buffer materials must be positioned between the two stacks of bombs to prevent line-of-sight exposure between stacks.

3.36.5. Steel nose and tail plugs must be used in all bombs. Bombs are arranged so the noses of the bombs in each stack are facing the buffer.

3.36.6. A minimum of 38 feet is maintained between the nearest bombs of the separate stacks. For bomb stacks of 24,000 pounds or less, 20 feet is acceptable. The stacks will be arranged within a structure so access is possible to verify the configuration.

3.36.7. Only serviceable munitions may be used in the bomb stacks or the buffer stacks.

3.36.8. Buffer material may be removed for periodic inspections without effecting sited capacities if it is returned within 24 hours.

3.36.9. The above criteria is approved for storage in the Continental United States (CONUS) and overseas locations where US explosives safety standards are the only criteria applied. In Europe, or other locations where host nation has established safety criteria, these principles must be accepted by the host nation before they may be applied.

3.37. Angled Storage. Test have shown that fragments from an exploding MK-82/84 bomb that are capable of initiating a nearby bomb are limited to a zone extending perpendicular to the bomb. Therefore positioning of bombs outside the fragment zone of other bombs may significantly reduce the MCE.

★3.37.1. In Hardened Aircraft Shelters (HAS). Place single bombs and loaded triple ejector racks (TER), or bomb rack units (BRU) at a 15 degree angle along one shelter wall. Angle bomb and rack away from the aircraft and point tails toward the wall.

3.37.1.1 Maintain a 4-foot separation from MK-84s to other weapons and a 30-inch separation from MK-82s to other weapons.

3.37.1.2. Do not align unfuzed cavities of bombs.

3.37.1.3. Install fuzes, boosters, steel nose and tail plugs or guidance packages.

3.37.1.4. Do not place bombs in an area on either side of another bomb bounded by two lines, 20 degrees forward and aft of lines perpendicular to the bomb centerline and starting at the nose and the tail of the bomb, respectively. See Figure 3.6.

★3.37.1.5. If above criteria is complied with, the MCE is the cumulative NEW of one TER or BRU, or for single angled bombs, it is the NEW of one bomb.

Figure 3.6 Fragment Zones for General Purpose Bombs

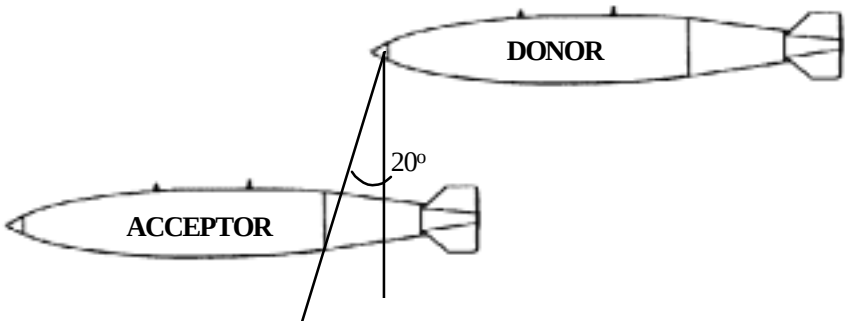

3.37.2. On Aircraft Parked on Open Ramps. The same fragment principle applies whether or not the bombs are on an aircraft or support stands. Open ramp, bomb loaded aircraft, separated at less than K11, may be angled to prevent simultaneous detonation. Combat aircraft parked at 45° with standard wingtip separation meet the IM separation requirement for MK 82/84 bombs. The MCE would be one aircraft. However, this principle applies only to general purpose bombs. Therefore do not site aircraft with an air-to-ground mission requiring other ordnance using reduced MCE for angled parking. Nevertheless, parking loaded aircraft at an angle may significantly limit collateral damage to adjacent aircraft and is preferred.

3.37.3. On Aircraft in HASs. When an explosives loaded aircraft is in the shelter, the weight of the explosives on the aircraft and the stored weapons must be combined if either the weapons on the aircraft or the stored weapons are in the fragment zone, described above, of the other weapons.

3.38. Weapons Storage Vaults in Hardened Aircraft Shelters. The special weapon contents of a weapons storage vault (WSV) will not contribute to an explosion in a HAS if certain separations are maintained. The following rules govern when determining the explosives content of a HAS containing a WSV:

3.38.1. The explosives in the WSV need not be considered when computing the NEW of the HAS if the vault is closed and the conventional munitions are at least 15 feet or K1.9 (whichever is greater) from the vault.

3.38.2. If the vault is opened with conventional munitions present, maintain maximum separation between the conventional weapons and special weapons within the HAS.

Figure 3.7 F-15 Aircraft Criteria

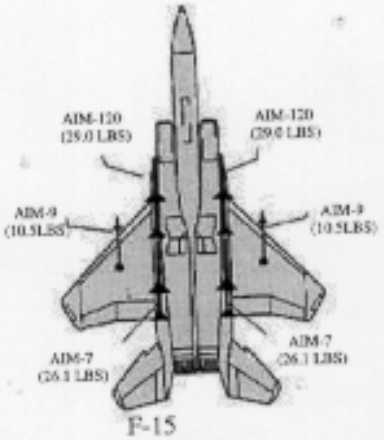

F-15
CONFIG:1
NEW:131.2
IM:56'
IBD:700'
PTR:420'

F-15
CONFIG:2
NEW:226.2
IM:67'
IBD:760'
PTR:456'

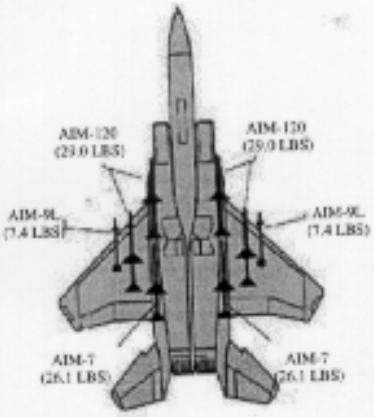

F-15
CONFIG:3
NEW:183
IM:63'
IBD:700'
PTR:420'

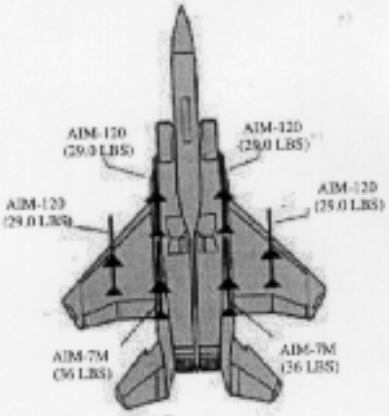

F-15
CONFIG:4
NEW:188
IM:63'
IBD:700'
PTR:420'

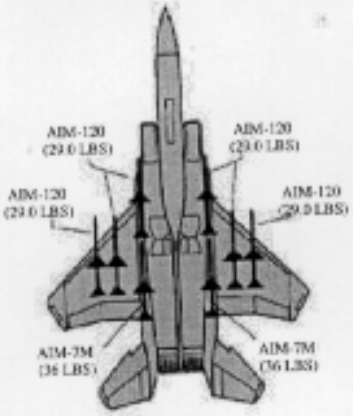

F-15
CONFIG:5
NEW:246
IM:69'
IBD:760'
PTR:456'

F-15
CONFIG:6
NEW:90.4
IM:50'
IBD:400'
PTR:240'

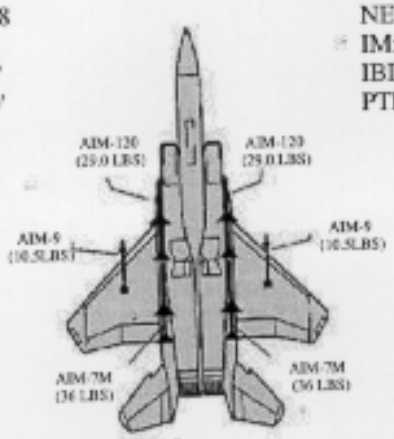

F-15
CONFIG:7
NEW:151
IM:59'
IBD:600'
PTR:360'

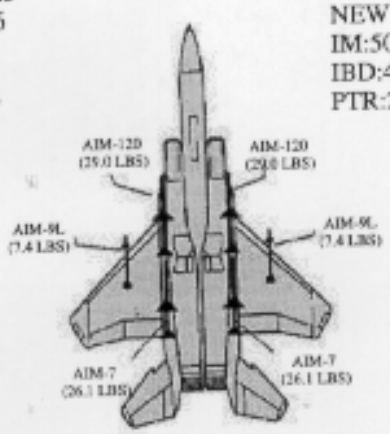

F-15
CONFIG:8
NEW:125
IM:55'
IBD:700'
PTR:420'

Figure 3.8 F-16 Aircraft Criteria

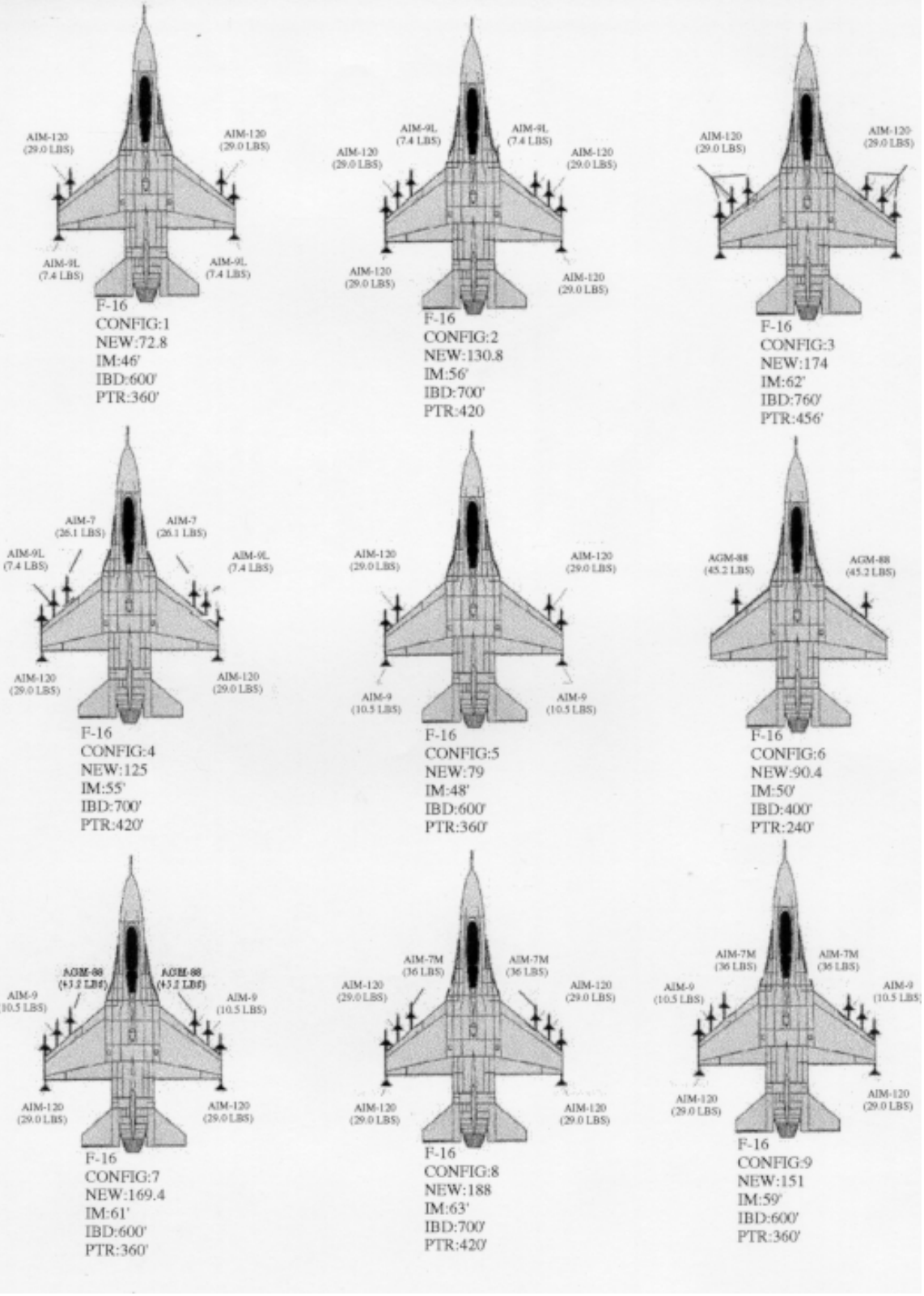

3.39. Specific Items and Situations. Some munitions have been tested sufficiently over the years that explosives criteria have been adopted for the specific item or situation. Table 3.22 gives these criteria.

★Table 3.22. Minimum Distances for Specific Items and Situations.

Line	Item/Situation	Quantity of Explosives	Required Distance (Feet)		
			IB (NOTE)	PTR (NOTE)	IL (NOTE)
1	Above ground storage of demolition explosives, thin cased low fragmentation munitions and in-process explosives	100 lbs NEW or less	670 (1)	400 (1)	50-83.5 (6)
1.1		101-11,400 lbs NEW (2)	900 (1)	750 (1)	84-406
1.2		101-30,000 lbs NEW	1250 (1)	750 (1)	84-560
2	Earth covered igloos - all munitions and explosives except 1.2 munitions and other munitions assigned minimum fragment distance greater than those listed in the following columns.	1-150 lbs NEW	500 front 250 side/rear	300 front 150 side/rear	(8)
2.1		151-450 lbs NEW	700 front 250 side/rear	420 front 150 side/rear	(7) (8)
2.2		451-11,400 lbs NEW (2)	900	750	(7) (8)
3	Locations where structures, blast mats, and personnel shielding will completely confine fragments and debris (for igloos see line 2).	50 lbs NEW or less	K40/50	K24/30	(6)
4	Explosives detector dog training facilities or buildings.	7 lbs NEW or less dispersed in structure	100 (4)	100 (4)	50
5	Explosives detector dog training Security Police Academy, Lackland AFB TX.	10 lbs NEW or less dispersed in structure	100	100	50
6	2.75" rockets having 4-in. parallel and vertical separation.	all quantities (AUR)	400	240	50 (7)
6.1	2.75" rockets stored and maintained in RSCA buildings. (5)	all quantities	0	0	0
7 7.1	AIM-7 series AUR missiles with other than WAU-17 warhead. Single missiles separated according to paragraph 3.34.1.	all quantities	700	420	(6) (7)
7.2	Packed in AUR containers - igloo storage only.	all quantities	500 front 250 side/rear (3)	300 front 150 side/rear (3)	(8)
7.3	Packed in AUR containers - Facilities with substantial dividing walls (see paragraph 2.41).	1 AUR	700	400	81
8	AIM-7 Series AUR missiles with WAU-17.				
8.1	Alternately stacked containers according to paragraph 3.34.3 in igloo storage only.	all quantities	500 front 250 side/rear (3)	300 front 150 side/rear (3)	(8)
8.2	Alternately stacked containers according to paragraph 3.34.3 in open storage or above ground magazines of light construction.	all quantities	400	240	95

Table 3.22. Continued.

9	AIM-7 AUR on trailer with or without other AIM-7 or 9 missiles stored in igloos	total quantity of all warheads radially aligned (10)	Same as 2 above	Same as 2 above	(8)
10	AIM-7 AUR on trailer with other AIM-7 missiles (not WAU-17) not stored in igloos	2-24 warheads radially aligned	700	420	(6) (7)
11	AUR on trailer with other AIM-7 missiles (with WAU-17) in open storage or above ground magazines of light construction.	all quantities	See paragraph 3.34.4	(9)	(6) (7)
12	AIM 7 missiles (all W/Hs) stored in facilities with substantial dividing walls.	MCE - 100 lbs or less	670	400	86
13	Single AIM-9 series missiles, separated according to paragraph 3.34.6, in any PES (includes Chaparral)	all quantities	400	240	50 (3)
14	AIM-9 in AUR containers stored in facilities with substantial dividing walls.	all quantities	400	240	(6) (7)
15	AGM-65 series missiles separated according to paragraph 3.34.7 or stored in facilities with substantial dividing walls.				
15.1	A/B//D Models	1 missile	400	240	73 (7)
15.2	A/B//D Models	2 or 3 missiles on launcher	500	300	115(7)
15.3	E/F/G Models	1 missile	670	400	84
15.4	E/F/G Models	2 or 3 missiles on launcher	900 or 1200 (2)	540 for 2 750 for 3	105 for 2 121 for 3
16	AGM-88 series AUR missiles	all quantities not radially aligned	400	240	(8) (7)
17	AIM-120 series missiles in AUR container	all quantities	800	480	400
17.1	AIM-120 missiles stored or maintained in facilities with substantial dividing walls.	MCE - 100 lbs or less	670	400	(6)(7)
18	MK82 GP bombs in the open or light structures	1 bomb	670	400	(6) (7)
18.1		2 bombs	860	515	(6) (7)
18.2		3-5 bombs	1080	650	(6) (7)
18.3		6-10 bombs	1240	740	(6) (7)
19	M117 GP bombs in the open or light structures	1 bomb	690	415	(6) (7)
19.1		2 bombs	820	490	(6) (7)
19.2		3-5 bombs	1020	610	(6) (7)
19.3		6-128 bombs	1470	880	(6) (7)

NOTES:

1. Incremental K40/50 (IB) or K24/30 (PTR) may be used when fragments or building debris are not involved. When fragments or building debris are involved 670 feet is the minimum distance. HC/D 1.2 munitions and HC/D 1.1 munitions with a fragment hazard number assigned are considered high fragmenting munitions. Explosives in any building are assumed to create building debris unless an engineering analysis shows fragments will not go beyond a lesser distance. When in doubt, contact HQ AFSC/SE, Kirtland AFB.
2. Use inhabited building distance shown to replace the minimum 1250-foot fragment distance only when there are less than 25 unrelated people exposed in any arc encompassing 45 degrees from 900 to 1250 feet from the PES.
3. Missile fragments are contained, therefore, since only the contents of one container will react, the secondary igloo debris distances apply.
4. Nonessential personnel will be evacuated a minimum of 100 feet during training exercises.
5. RSCA buildings must have at least 3/8" steel doors. Rockets must face a 12" wall.
6. Use K18 distance for the maximum credible event (MCE), minimum 50 feet.
7. Does not provide protection against fragments.
8. Use K18 to front, K16 to sides, K12 to rear for MCE, minimum 50 feet.
9. Calculate PTR as 60 percent of IBD.
10. NEWs for missiles in radial alignment need to be totaled only if warheads are separated by less than 100 inches

---

Chapter 4

EXPLOSIVES SITE PLANNING, CONSTRUCTION REQUIREMENTS AND ASSESSING RISK

4.1. General Information. To minimize the negative effect of an accidental explosion on a unit's capability, safety and civil engineers monitor and control construction and facility utilization inside explosives clear zones. Where explosives are involved in a unit's mission, managing the explosives safety clear zone is the corner stone in helping the commander meet mission requirements, maintaining mission capability and efficiently use limited resources. Planning for the proper location and construction of facilities is a key elements in this effort. To this end civil engineering in coordination with safety, fire, health, security and environmental agencies play a critical role.

4.1.1. The explosives clear zone is the area surrounding a potential explosion site which is determined by the required inhabited building separation. The inhabited building separation will be based on the sited, waivered, exempted, or actual explosives limits of the potential explosion site, whichever is greatest. Attempt to site explosives limits based on physical capacity or operational need, not solely on distances to other exposures. Civil engineers ensure explosives clear zones are depicted for all explosives locations on appropriate comprehensive planning maps.

4.1.2. Establishing and monitoring IBD clear zones does not necessarily eliminate accepted risk. Section C of this chapter explains the effects of explosions, allowing users to weigh risks against operational requirements.

Section A--Explosives Site Planning

4.2. Basic Guidance. The explosives site plan (ESP) contains all necessary information to properly site and construct, either a potential explosion site (PES) or an exposed site (ES). An ESP usually originates at the wing or base and is in the form of a request. Once approved, the ESP becomes the source document for explosives capacities and controls for that facility. Generally an ESP is required whenever new facilities or operations are added inside the installations IBD clear zone. It is the approval to either increase explosives or increase the exposures hazarded by explosives. The weapons safety office will prepare and submit ESPs for facilities or operations requiring explosives safety siting approval. Approved ESPs will be maintained by the safety office. The base Civil Engineer will assist in preparing ESPs and ensure the weapons safety office is apprised of all proposed actions planned within the IBD clear zone before design and construction begin. Other functional requirements associated with the ESP process are covered in other sections of this chapter. An approved ESP authorizes:

4.2.1. Construction or modification of facilities or locations where UN Class 1 material (explosives/ammunition) will be stored or maintained.

4.2.2. Construction or modification of non-explosives facilities within explosives clear zones. Do not expend Air Force construction funds on a project requiring an explosives site plan until final approval is granted by the DDESB. The expenditure of design funds on a PES or ES facility prior to DDESB approval are at risk if the approval is contingent on changes or new facility requirements that were not considered or adequately addressed during the ESP preparation and review process. Specific requirements are identified in paragraph 4.11.

4.2.2. (AFRC) Preliminary site approval should be obtained prior to start of design.

4.3. The Submission Process. The ESP originates at the installation level and is forwarded through command safety channels to the Air Force Safety Center. After review by AFSC/SE, the ESP is endorsed to the DDESB for approval.

4.3.1. Tenant units forward ESPs through the host installation and command safety channels. In cases where the host exposes a tenant facility, the host MAJCOM will obtain agreement of the tenant MAJCOM before processing the site plan. When a US Air Force unit is tenant on an Army, Navy or Marine base, request formal site plan approval through that service. The site plan must meet the Q-D requirements of this regulation in addition to all host agency criteria. Submit an information copy of the site plan request through command safety channels to HQ AFSC/SE.

4.3.2. MAJCOMs must submit original and one copy of the ESP to HQ AFSC/SE. Include a MAJCOM safety endorsement stating approval along with any changes, modifications or specific precautionary measures considered necessary.

4.3.2. (AFRC) AFRC bases send three copies of site plan to AFRC/SEW and an information copy to their numbered air force (NAF). Tenant units forward an information copy to NAF/SE and HQ AFRC/SEW.

4.3.3. If planned explosives facilities involve biological and chemical fillers, liquid propellants, toxic gases, sonic hazard areas, any form of electromagnetic radiation affecting health (including radioactive sources and microwave generators) and industrial x-ray, the MAJCOM will forward an information copy of the ESP to the Office of the Surgeon General, 170 Luke Avenue, Suite 100, Bolling AFB MD 20332-5113.

4.3.4. Do not start construction on a project requiring an explosives site plan until approval is granted by the DDESB. For site plans where no construction is involved, do not start explosives operations or non-explosives operations within explosives clear zones until the site plan is approved at MAJ COM level.

4.4. Specific Situations Requiring Explosives Site Plan Submission. An ESP is required whenever explosives will be introduced into an area not previously approved for explosives, or the risks within IBD clear zones are increased. Examples: The proposed construction of a new missile maintenance facility would be an introduction of explosives and would require an ESP; an external addition to a flightline avionics shop (already in an explosives clear zone) is an increase in risk to the shop and would require an ESP; an aircraft parking location previously sited for (04)1.1 munitions is scheduled to hold (05)1.1 munitions would require an ESP.

4.5. Siting a Potential Explosion Site (PES). Locations on an Air Force installation containing explosives and ammunition normally are authorized by an approved ESP. (Exceptions are noted in par 4.5.1) This includes aircraft parking locations where aircraft may be loaded with ammunition and explosives. Submit new explosives site plans if the quantity of explosives at a PES increases or a more hazardous explosives class/division is introduced. The installation will maintain DDESB approved ESPs. Dispose of ESPs in accordance with AFMAN 37-139, *Records Disposition Schedule*.

★4.5.1. Exceptions to siting a PES. Licensed explosives facilities, hung ordnance areas, arm/dearm areas and aircraft loaded with installed explosives such as egress items, life support, defensive flares or spares do not require an ESP. Suspect vehicle and vehicle inspection stations do not require an ESP. (See paragraph 2.74.15). *Shelters* for arm/dearm crews must be sited.

★4.5.2 Transportation change of mode operations do not require an ESP. These include roll on/roll off operations not involving lifting. MILVAN/ISO container tranfers involving highway and rail modes only, where containers are not stored and no other operations are performed, do not require site plans.**4.6. Siting a Non Explosives Exposed Site (ES).** (NOTE: An ES may be either explosives or non-explosives, this paragraph addresses non-explosives locations only.) Submit an ESP for new construction of non-explosives facilities inside IBD clear zones. A unit may or may not have an ESP on record for every non-explosives ES. If the site plan has been discarded or lost, re-submission is not necessary if the ES is identified on all ESPs for PESs which hazard it. For example, you do not have a site plan for a maintenance hangar inside a clear zone, yet the hangar is identified on site plans for the PESs which encompass it; resiting the hangar is unnecessary. Small unmanned miscellaneous structures that have a Q-D requirement of fifty feet or less do not require an ESP.

4.7. Facility Modifications or Change in Use. Existing facilities may be modified as needed to meet changing mission requirements. If the modification reduces the required quantity-distance separation, or increases the overall floor space, such as room additions, a site plan is required. Unit and MAJCOM safety staffs must work closely with civil engineers and users, to ensure safety standards are not compromised. The following rules apply to these modifications:

4.7.1. Modifications of facilities not covered by a waiver or exemption. These actions may be approved at MAJCOM, or delegated to a subordinate level provided the following rules are observed:

4.7.1.1. Modifications must not cause additional hazards or reduce the effectiveness of built-in safety features of the building.

4.7.1.2. The facility and its occupants/contents must be mission essential and related to the potential explosion site. For example, if a maintenance and inspection facility, sited at K18 is to be modified, a site plan will not be needed if only K18 authorized people are exposed after the modification.

4.7.1.3. The modification must not change the nature of the operations or cause additional hazards. For example, the modification of a nuclear maintenance facility to handle conventional munitions would require a site plan.

4.7.1.4. The modifications must not require congressional, NATO, or host nation funding.

4.7.1.5. Limit modifications to internal areas only.

4.7.2. Modifications of facilities under waiver or exemption. Facilities covered by a waiver or exemption will require AFSC review. The final approval authority will be determined on an individual basis, but will depend primarily on the nature of the exposure and the original approval level of the waiver or exemption. SAF review will be necessary on all requests for modifications involving exemptions granted at that level.

★4.7.3. Facility use changes which result in a different, or more hazardous operation, within the facility or site, requires new site plans. Examples would include converting a conventional bomb build up facility to a missile assembly and checkout operation, which would change the nature of the operation and the necessary safety precautions.

★4.7.4. Increased storage at existing facilities, which cause increases in clear zone size, will also require new site plans.

★4.8. Approval Levels for Specific Explosives Sites. Except as identified below, the DDESB is the final approval level for all ESP's.

4.8.1. MAJCOMs approve the following sites. Format for siting approval will be determined by MAJCOM.

4.8.1.1. Disposal ranges sited on weapons ranges.

4.8.1.2. Aircraft battle damage repair sites not in clear zones and using 2 ounces or less of explosives packed inside a length of steel pipe. See paragraph 3.26.

★4.8.1.3. PRIME BEEF or other training areas using flares, simulators, and smoke producing devices (HC/D (04)1.2, 1.3 and 1.4 only) not within an established clear zone. This applies to locations of recurring training, and not to exercise support activities, which move each time, in accordance with exercise scenarios; required distances will be documented in OIs or other applicable written guidance for exercise support activities that don't have a fixed location.

★4.8.1.4. Installation of Weapons Storage Vaults (WSVs) in Hardened Aircraft Shelters. (See paragraph 3.38.)

4.8.2. Contractor Owned Contractor Operated (COCO) facilities on non-government land. The Procuring Contract Officer (PCO) approves Explosives Site Plans for Air Force contracts involving explosives or ammunition. ESPs are prepared and submitted by the contractor. These ESPs need not be forwarded to either HQ AFMC, the Air Force Safety Center, or the DDESB. The installation weapons safety officer evaluates the ESP and provides approval or disapproval recommendations to the PCO.

4.8.3. The DDESB approves ESP's for Government Owned Contractor Operated (GOCO) facilities and Contractor Owned facilities on government land.

4.8.4. All ESP's involving contractors must be reviewed and approved through the Defense Plant Representative Office (DPRO), Administrative Contract Office (ACO) and the Designated Acquisition Commanders (DAC) safety office prior to AF processing.

4.9. Site Plans Involving Violations of Explosives Safety Standards. All ESPs will include those exposures not meeting Q-D standards. These site plans will be approved IAW Chapter 5 of this manual.

4.10. Tier Siting and Risk Management. Tiered siting is useful when the explosives content of a PES varies because of operational requirements. Under this concept, it is frequently possible to take management actions (compensatory measures) to protect or move resources and people before the introduction or increase of explosives. Typically, explosives siting problems are encountered around a flightline PES where lack of real estate coupled with high concentrations of people, facilities, and equipment make compliance with Q-D standards difficult.

4.10.1. Tiered Siting. Tiered siting is a planning method available to commanders, with MAJCOM approval, during periods of increased explosives activity such as exercises or contingencies. The commander may change the nature of exposed sites before allowing or increasing explosives at a PES. In a tiered system a PES may have a different sited weight for peacetime, exercise or wartime. The concept is not limited to these situations, and may be exercised at other times depending on local conditions. To maximize protection under a tiered siting approach, the responsible commander publishes procedures to ensure removal of critical resources and personnel at an ES prior to increasing explosives weights.

4.10.2. Procedures for Tiered Sitings. Determine the NEW required at each PES and the level of protection for each ES at each tier (e.g., day-to-day, exercise, inspection, wartime). In instances when the required level of protection cannot be met, determine if compensatory measures, such as evacuation of personnel, are a viable option.

4.10.3. Documenting Tiered Management Actions. Use base OPlans, OIs, agreements, base supplements or other appropriate publications to document tiered actions. The publication must specify:

4.10.3.1. The organizations responsible for implementing risk reduction actions.

4.10.3.2. Conditions under which risk reduction actions will be directed and when they will take place.

4.10.3.3. Critical resources and personnel to be relocated.

4.10.3.4. Critical equipment and supplies to be protected or relocated.

4.10.3.5. Procedures to ensure the ESP is evaluated on a recurring basis.

4.10.4. Submitting Tiered Explosives Site Plans. Use the general guidance in paragraph 4.11.2 when submitting tiered sited plans. Specify the document used in paragraph 4.10.3 above, it is not necessary to include it in the site plan.

★4.10.5. A management plan that assigns responsibilities and roles; beginning with the tiered site planning and control requirements and extends through the activity, until the operations return to normal. For existing construction: Under all tiers, evacuate personnel from an ES falling within the arc generated by the increased NEW in a PES. An approved waiver or exemption is required if the ES cannot be vacated.

★4.11. Explosives Site Plan Development. The Weapons Safety office is instrumental in the explosives site plan development process beginning with the initiation of the concept development phase. The civil engineer or facility user notifies safety as soon as a need is identified to build, modify, expand, or change the use of any PES or ES. Weapons safety determines the need for an explosives site plan and solicits the information to prepare the request. The civil engineer assists safety by providing current maps or drawings and supplies facility design information such as wall construction, grounding, technical facility design assistance, and lightning protection information. Both new and modified buildings sited within any explosives inhabited building Q-D arc, which have glass panels and routinely contain personnel, must have glass that will minimize personnel injury, i.e., shatter resistant tempered glass to reduce glass shards. New construction will also have windows equal to the strengh of the walls in terms of withstanding (rated) psi pressure. (See paragraph 4.17.8.)

4.11. (AFRC) The wing/unit safety office has the responsibility to coordinate the complete site plan package with affected agencies (that is, BCE, Munitions, Security, etc.) prior to submission to higher headquarters.

4.11.1. Preliminary Versus Final Safety Review. When submitting an ESP for new construction and design details are incomplete, request preliminary site approval for the project. Preliminary approval generally addresses Q-D relationships and authorizes civil engineering (CE) planning activities to continue. Final DDESB approval addresses safety features, such as facility designs, protective measures, and coordination of operations to be conducted, and is necessary before construction begins.

4.11.1. (AFRC) When submitting a facility design for final review and approval, ensure the following are included: lightning protection system, concrete dividing walls, grounding systems, fire suppression systems, locations of any windows (glass breakage assessment), etc. Scale drawings are required on all details of the lightening protection system including demonstration of the 100 foot rolling ball theory. (See NFPA section 780, and appendix K).

4.11.2. Preparing the Explosives Site Plan Package. Include all the information needed for the reviewer to determine whether or not DoD and Air Force explosives safety requirements are being met. The exact contents of the package may vary depending on the operation/facility to be sited. For some sitings, a transmittal letter containing pertinent information and a map, is all that is necessary for reviewers to understand the intent and grant approval. Other packages may require detailed drawings, engineering analysis, commander certifications or additional documents needed to verify compliance with applicable explosives or other safety standards.

4.11.3. The Transmittal Letter. The transmittal letter accompanying the ESP is important for getting a site plan successfully reviewed and approved. Generally, all aspects of the siting should be explained; attempt to answer any question before it is raised. Personnel reviewing the ESP may not be familiar with the base or operation, including unique terminology, and do not know the mission or specific circumstances.

4.11.3.1. Begin the letter by explaining the purpose of the submission, for example “Request routine processing for subject site plan for preliminary approval.”

4.11.3.2. State the reason(s) for the request, for example “to construct a new maintenance and inspection facility,” or “to increase the NEW at an existing above ground magazine.”

4.11.3.3. When the ESP replaces an existing ESP include a cancellation statement, for example “The modification to this facility cancels ESP AFMC-Hill-85-S7”

4.11.3.4. State whether or not all explosives safety criteria will be met. If the siting has any unique characteristics, explain what criteria is being applied, and the basis for the application. Describe compensatory measures if they are necessary to meet Q-D standards. To understand compensatory measures see paragraphs 4.10. and 5.2.6.

4.11.3.5. For ESPs involving new construction, include the project identification and Programming, Design, and Construction (PDC) number.

4.11.3.6. Discuss any future plans that may impact this siting. State that the Base Facilities Board has reconciled this particular site plan with the base comprehensive plan. (provide meeting minutes, dated reference or written record of reconciliation).

4.11.3.7. Explain the format being using to record the required information. For example, “the attached AF Form 943 and map show all the exposures and required separation.”

4.11.3.8. To request priority processing action, include the following information.

★4.11.3.8.1. On the subject line of the memorandum state: “Request for EXPEDITIOUS processing of Explosives Site Plan (ESP) [include complete site plan number].” Explain in the site plan transmittal letter (either the unit’s or the MAJCOM’s) the reasons why expeditious processing is necessary. Recommend MAJCOMs cite page/paragraph of the unit’s package that justifies the urgency.

4.11.3.8.2. Date when approval is needed.

4.11.3.8.3. Proposed contract award date, if applicable.

★411.3.8.4. Reasons for priority action must show sufficient mission impact to warrant expeditious review. If not, the site plan will be reviewed according to the routine processing time which takes approximately 60 days.

4.11.3.8.5. Staff agency points of contact in event clarification is required.

4.11.4. Maps and Drawings. Submit a base map which clearly shows all the PESs and ESs making up the site plan. Computer generated drawings are acceptable provided they have the same type of information normally included on a typical base map. Use 1"= 400' (or metric equivalent) scale. To enhance clarity or show precise measurements, use a larger (1"=200' or 100') scaled map. Details such as the specific points of measurement, actual and required distance, and NEW's are encouraged. When there is reasonable doubt about the accuracy of the mapped location of a pair of PES-ES facilities (depicted on the installations explosive site plans), it is the responsibility of all participants in the explosive siting process to define a locally acceptable method for determining the measurement accuracy required between the PES-ES locations.

★4.11.4.1. When siting an ES, the map must show all the PESs whose appropriate Q-D distances encompass it. When siting a PES, show the appropriate Q-D distances the PES generates. In siting a 20K 1.1 munitions maintenance facility, the map must show its appropriate Q-D distances as well as the appropriate Q-D distances of other PESs which encumber the munitions maintenance facility. Clarity and the ability of reviewers to validate the application of the Q-D rules is the key.

4.11.4.2. For multiple sitings of PESs, an overall expanded arc for the entire area is acceptable. Showing other Q-D safety zones, such as PTR, IL or IM is acceptable if it does not add confusion to the site plan.

4.11.4.3. Use color coding to simplify and speed the review process. Identify PESs in red and ESs in green. Highlight the clear zone lines in red.

4.11.4.4. Include site plan number, scale and color coded legend on each map or drawing.

★4.11.4.5. For final approval, submit construction drawings showing applicable safety and protective features directly relating to the facility. These drawings must show, as a minimum, the general details. Safety and protective features include dividing walls, vent walls, firewalls, roofs, operational equipment, ventilation systems and equipment, hazardous waste disposal systems, lightning protection system, static grounding systems, process equipment, windows, and auxiliary support structures as well as general construction materials. Do not submit drawings for landscapes or pavements, etc. Narrative descriptions are unnecessary for facilities pre-approved by the DDESB. These facilities must be identified by a drawing number.

★4.11.4.5.1. Lightning protection system drawings must include a top view of the facility showing the locations of the elements of the lightning protection system, such as air terminals, masts, overhead wires, grounding electrode system and a description of the surge protection. Include at least a front and side view of the facility showing the zone of protection required by NFPA 780, Section K (100 foot rolling sphere), unless the rebar in an igloo is used as part of the lightning protection system. Provide additional views, as necessary, after considering all possible placements of the rolling sphere concept. The drawings must contain dimensions.

4.11.4.5.2. For facilities where a distance equivalent protection is claimed, a certified structural engineering analysis is required. It must include relevant computations, and conclusions.

4.11.4.6. Show topographic contours or features, such as natural barricades (i.e. dense forest) or hills, if they are pertinent to the application of Q-D.

4.11.5. Siting a PES. For requests to site PESs, the following information must be included. Other information may be required for unique explosives locations.

4.11.5.1. Description. A design description or drawing of the facility. This includes wall and ceiling construction, floor layout, windows, electrical plans, (i.e. grounding, and lightning protection). NOTE: Narrative descriptions are unnecessary for facilities pre-approved by the DDESB and identified by a drawing number. See Chapter 5, 6055.9-STD or ask AFSC/SE for more details. HASs may be referred to by type, (i.e., 3rd GEN, Korea, etc).

4.11.5.2. Weight. The maximum net explosives weight (NEW) to be placed in the facility in terms of maximum credible event (MCE). Include net explosives weights for each class division of explosives. For multiple room facilities show, NEW, HC/D for each room where explosives will be involved. Where IM is not provided between rooms/cubicles, show overall NEW for the facility. If explosives are unpackaged see paragraph 3.4.2.2.

4.11.5.3. User. The organization whose assets or people will be in the facility. Include the branch of service if other than the Air Force is involved. Include the MAJCOM, Wing, Squadron, and show unit designations by number and alpha designation.

4.11.5.4. Number of Persons. For explosives operating locations, include the average number of persons who will be in the facility during normal duty hours. Consider the number of persons present during exercises. It is not necessary to distinguish between military and civilian unless the civilians are not employed or contracted by the Department of Defense. ***NOTE:*** Aircraft parking locations, even if used for uploading/downloading explosives are not considered operating locations for personnel counts.

4.11.5.5. Special Features. The type, description and location of barricades or other features which effect the required separation distances.

4.11.5.6. ES Listing. Provide a listing of all facilities falling inside the PESs IBD clear zone. Describe each ES in terms of: type, function, user, number of occupants, required Q-D separation and actual distance from the PES. If the ES is a PES, include its sited NEW for each Class/Division. Identify PESs outside of the sited PES IBD clear zone which have sufficient NEWs to hazard the proposed PES. See paragraph 4.11.4.1.

4.11.5.7. Map. Include a base map or drawing, as outlined in paragraph 4.11.4 above, that accurately depicts the proposed PES, its IBD clear zone, and (as a minimum) all ESs within its clear zone.

4.11.5.8. Distances. Include the required and actual separation to each ES, in feet, and the appropriate K-factor or rule being applied.

4.11.6. Siting an ES. For requests to site ESs, the following information must be included. Other information may be required for unique facilities.

4.11.6.1. Description. A thorough description of the facility to include: type of construction, function, and location and type of windows. See paragraph 4.17.8 for additional requirements for windows or glass panels.

4.11.6.2. User, Number of Persons & Special Features. Use the same guidance as in paragraphs 4.11.4.3 to 4.11.4.5.

4.11.6.3. PES Listing. A listing of all PESs whose IBD clear zone encompasses the proposed ES. Describe these PESs in terms of paragraph 4.11.4. ***NOTE:*** It may not be necessary to identify all PESs in some circumstances. For example an inert storage structure requiring 50 feet from any PES can be sited by merely identifying the nearest PES.

4.11.6.4. Distances. Include the required and actual separation to each PES, in feet, and the appropriate K-factor or rule being applied.

4.11.7. Using AF Form 943. This form is one possible tool to document most of the information required for a site plan package. Use Attachment 4 to complete the AF Form 943. This form is ideally suited for siting one PES or one ES. If multiple PESs are sited simultaneously, such as a cluster of hardened aircraft shelters, or a row of storage pads, an alternative format may be desirable. *The primary objective is to present the required information, clearly and concisely so reviewers can verify compliance with the explosives safety standards.* Alternative formats to the AF Form 943 are described in paragraph 4.13.

4.11.7. (AFRC) Use Air Force Form 943 , **Explosives Site Plan/Waiver/Exemption**, for all site plans submitted by AFRC host units. With the exception of aircraft parking locations, use a separate AF Form 943 for each ES or PES being sited.

4.12. Computerized Site Planning. The use of computer generated forms or databases expedites the site-planning process and allows drafts of ESPs to be forwarded to the next level of review for preliminary review or used as a training tool. The instructions at Attachment 4 match the AF Form 943 on the Air Force Electronic Publications Library (AFEPL). A Microsoft (MS) Word 6.0 version is easier to complete and may be downloaded from the AFSC BBS.

4.13. Other Explosives Site Plan Format Options. Formats other than the AF Form 943 which present the required information are acceptable.

4.13.1. Matrix Method. A grid with PESs along the top and ESs down the side can easily be used to show all possible relationships between any number of PESs and ESs.

4.13.1.1. Advantages of Matrix Method. This method is best suited for siting an entire area such as a flightline or munitions storage area where numerous PESs exist. It significantly reduces the amount of paperwork since each ES is entered only once as opposed to numerous repeated entries on AF Form 943s. A completed matrix ensures Q-D is examined in both directions.

4.13.1.2. Disadvantages of Matrix Method. Letter or legal size paper usually is not large enough to accommodate the matrix. A computer generated table cannot easily be printed. Creating the matrix on poster size paper can be time consuming and difficult to copy.

4.13.2. Overlay or Template Method. A scaled drawing of the PES and its various clear zones (IM, IL, PTR, IB) on transparency can be overlaid on a map to determine quickly whether or not Q-D standards are being met. PES and ES descriptions are listed on a separate sheet of paper. Color coding ESs according to the category of required Q-D further simplifies the package. For example all related facilities would be one color, PTR another color, and so on. Then by viewing through the template and noting the colors, Q-D is verified.

4.13.2.1. Advantages of the Overlay or Template Method. This method is best suited to site numerous PESs which are identical in size and NEW, such as hardened aircraft shelters or standard igloos. A massive package of AF Form 943s can be reduced to four items: (1) Map; (2) Template; (3) Listing of Ess; and (4) Listing of PESs. The time required to review an ESP using this format is substantially reduced.

4.13.2.2. Disadvantages of the Overlay or Template Method. This method depends on graphic aids. It requires accurately scaled templates and drawings which the civil engineer may be able to produce. Templates must show all possible clear zones. Without computer assistance, this method may be too time consuming.

4.14. Siting for Contingencies, Peacetime Deployments or Exercises Simulating Contingencies. Explosives Safety is an integral part of deployment planning. See paragraph 1.4. Site plans will reflect a base's war plans. For Co-located Operating Bases (COBs), owning MAJCOMs assemble an explosives site plan package, based on existing war plans, for approval. Once approved, MAJCOMs will make them available to deploying units tasked to activate the base.

4.15. Establishing and Maintaining IBD Clear Zones.

4.15.1. Comprehensive Plan Maps C-1, D-8, E-9 and M-3 (as applicable) will reflect the explosives IBD clear zones. For tiered siting (see paragraph 4.10.) only the largest IBD clear zone need be shown except on the D-8 which must show the clear zones for all tiers.

4.15.2. The weapons safety manager (WSM) will assist the civil engineer in determining the explosives IBD clear zones required on appropriate base maps. Clear zones must reflect the DDESB or MAJCOM approved net explosives weights (NEW).

4.15.3. IBD clear zones on the comprehensive plans need not be changed when clear zones are expanded by short-term (1 year), non-recurring waiver situations.

4.16. Reduction or Redesignation of Clear Zones. When a permanent reduction or re-designation of an explosives clear zone is required, a coordinated, joint-activity (installation safety, civil engineering, and logistics) request letter is prepared and submitted to the host MAJCOM Safety Office through the respective MAJCOM activity offices. Requests must be signed by the installation commander and include justification for the reduction. To better evaluate the impact if the reduction is not approved, include a clear zone map showing both the old and proposed clear zones. No actions will be taken to redraw base maps or construct facilities until MAJCOM approval is received.

4.16.1. Temporary Reduction or Redesignation of Clear Zones. Temporary reduction or re-designation of existing explosives clear zones (2 year or less) may be desirable to accommodate a temporary facility change-of-use or the temporary introduction of non-related activities into the clear-zone without the need for explosives waivers or exemptions. Such actions will not be used as a tool to alleviate the requirement to obtain siting approval for other permanent facilities built within the permanent clear zone.

Section B--Construction Considerations for Explosives Facilities

4.17. General Munitions Facility Design Information. Primarily, design procedures and construction techniques for explosives facilities must provide the required protection for personnel, essential materiel and equipment. AFJMAN 32-1092 (AFM 88-22), *Structures to Resist the Effects of Accidental Explosions*, should be used in planning and designing explosives facilities. Managers must carefully evaluate their need for explosives facilities and ensure construction techniques satisfy safety requirements. The following are examples of items which should be considered.

4.17.1. Provide blast doors and dividing walls only where high explosives are involved and protection of personnel and high-value inert equipment, or preventing propagation is desired.

4.17.2. Blast doors and dividing walls should be provided only where high explosives are involved and protection of personnel or preventing propagation is desired.

4.17.3. Earth-covered, igloo-type structures are preferred for storing explosives. Use AFJMAN 32-1092 (AFM 88-22) in designing the structure. Contact AFSC/SEW for a listing of approved earth covered magazine (ECM) drawings.

4.17.4. Construct exterior walls and roof coverings of non-combustible materials.

4.17.5. Construct roofs and walls, except for specifically designed containment and protection purposes, as light in weight (weak) as practicable. Construct facility features to allow venting of an internal explosion with the minimum number of large fragments. Exceptions are made where design requirements such as the following must be met: fire walls, substantial dividing walls, special roof loading, external overpressure protection, and specialized manufacturing facilities.

4.17.6. Design facilities specifically for class/division 1.3 materials using "Hazard Division 1.3 Passive Structural Systems Design Guide."

4.17.7. Provide magazines with appropriate means of air circulation or dehumidification, vermin-resistance, and condensation drainage from the storage facility interiors.

★4.17.8. New or modified buildings constructed within any explosives inhabited building Q-D arc, which have glass panels and routinely contain personnel, must have glass that will minimize personnel injury, i.e. shatter resistant tempered glass to reduce glass shards. Personnel hazards from glass breakage can also be minimized by means such as building orientation and/or keeping the number of exposed glass panels and panel size to a minimum.

4.18. Interior Finishes and Floors for Explosives Handling Facilities.

4.18.1. Non-combustible material will be used for interior surfaces of buildings (Military Handbook 1008).

4.18.1.1. Where hazardous operations (paragraph 2.46) exist, interior surfaces should also be smooth, free from cracks and crevices, and have joints taped or sealed.

4.18.1.2. If painted, the surfaces should be covered with a hard gloss paint that is easily cleaned. Horizontal ledges which might hold dust will be avoided or beveled to prevent dust collection. Cove bases at the junction of the walls and floor are recommended.

4.18.1.3. If it is necessary to use combustion-supporting materials in the interior of an operating building, treat or cover all exposed surfaces with fire-retardant material.

★4.18.2. Conductive non-sparking floors are required where certain exposed explosives and materials are sensitive (easily detonated or ignited) to the uncontrolled discharge of static electricity. A documented MAJCOM-approved technical analysis is required before an alternative electric static dissipating method is used instead of conductive floors.

4.18.2.1. Such floors will be non-sparking. This flooring must be smooth, free from cracks, and of a type that will not develop surface separations, wrinkle, or buckle under operational loads. Do not paint over these floors.

4.18.2.2. The electrical resistance measured between the ground and a 5-pound electrode in direct contact with 5 square inches of floor area will not exceed 250,000 ohms.

4.18.3. Where washing is required, floors must be able to withstand repeated applications of hot water and cleaners.

4.19. Fire Walls in PES Facilities. Fire walls are designed to limit the spread of fire to only one zone of a facility. They are normally extended through the roof of the building to prevent a fire on one side of the fire wall from immediately spreading to the remainder of the facility. Construct proposed fire walls as prescribed in Military Handbook 1008B. Protect any openings through the fire wall as described in the National Fire Protection Agency Standard 80, Standards for Fire Doors and Windows.

4.19.1. Two-hour fire walls may be used to provide required separation for compatibility groupings of HC/D 1.4 and up to 100 lbs NEW of HC/D 1.3 munitions.

4.20. Reinforced Concrete Walls. The capability of a 12-inch reinforced concrete wall to prevent simultaneous detonation (IM distance) in an adjacent bay is based on a limit of 425 pounds NEW of HC/D 1.1 explosives, when placed 3 feet or more from the wall. Where these weight and spacing restrictions cannot be met, an engineering evaluation must be made to address the specific conditions according to AFJMAN 32-1092 (AFM 88-22) criteria to determine the proper wall construction or explosives weight and spacing limitations.

4.20.1. For special weapons, the criteria in TO 11N-20-7, when more restrictive, will be the limiting factor and override the above criteria.

4.20.2. The provisions of paragraph 4.19.1 apply.

4.20.3. If the 425 pound NEW HC/D 1.1 limit is not exceeded, these walls may be used to provide the required intermagazine distance separations for compatibility groupings of all types and classes of explosives. The walls at this NEW do not protect personnel on the opposite side of the wall because of spalling. Refer to AFJMAN 32-1092 (AFM 88-22) and Mil-Std 398 for personnel protection standards.

4.21. Blast Doors. Design blast doors which separate explosives working spaces or storage spaces in existing buildings to meet design definitive drawing specifications. Design these doors to be at least equal in strength of adjacent walls. (See AFJMAN 32-1092 (AFM 88-22), *Structures to Resist the Effects of Accidental Explosions*, for design factors for new structures). Take care to ensure these doors are not installed as a matter of convenience. Avoid blast doors when a continuous reinforced wall would not unnecessarily interfere with operations.

4.22. **Building Exits.** One properly located exit is suitable for small operating rooms or cubicles which have substantially constructed walls on three sides.

4.22.1. In larger buildings or rooms, at least two exits remote from each other (regardless of dimensions), will be provided for each operating room or building containing explosives.

4.22.2. If more than eight persons are occupying a room containing explosives, it should have more than one exit or one exit for each multiple of five persons. (or fraction thereof).

4.22.3. Exits should be at least 32 inches wide. However, in determining the total number of exits required, available space (in multiples of 32 inches of width) may be considered additional exit units. Exits should be spaced equally about the perimeter of the building.

4.22.4. Exits should be no more than 25 feet, but never more than 75 feet, away from employees working within these facilities. Exits should lead directly outside. Plan each exit to avoid obstructing the escape of personnel. Avoid, if possible, placing explosives, equipment, and operating materials between personnel and exits.

4.23. Exit Doors. Exit doors in operating buildings will open outward. During operating hours, these doors may be fastened with dead-bolt panic hardware that cannot be operated from the outside. The size of the exit door should never be less than 32 inches by 80 inches high. Do not obstruct exit doors or departure routes.

4.23.1. Except for storage magazines, exit doors should be panel or flush surface type construction.

4.23.2. Vision panels in each door are desirable. The using agency may omit them for security. Vision panels should be in the upper half of the door, not exceed 100 square inches with no single dimension greater than 4 inches, and glazed with acrylic plastic or equivalent material. They should be of shatter resistant, non-combustible material or slow-burning material of a type which is practically smokeless. See paragraph 4.17.8.

4.24. Safety Chutes. Safety chutes will be provided as exits from multistory hazardous locations where rapid egress is vital and cannot be otherwise provided.

4.24.1. Supporting members for safety chutes should be made of non-combustible materials and anchored to structural members designed to provide resistance to the effects of an explosion/fire.

4.24.2. These chutes must be provided for work levels above the ground floor. They should be placed on opposite sides of the operation (so that people will not be trapped by a fire between them and a single chute).

4.24.3. Exits to safety chutes will open on a platform at least 3 feet square, equipped with guardrails. The chutes will begin at the outside edge of the platform.

4.24.4. Landings from safety chutes should be located where escape routes will be free from tripping hazards, low guy lines, drains, ditches, or other obstructions.

4.24.5. A manual or automatic tripping device should be installed at or near the entrance to chutes to give an alarm in the operating building and nearby structures. This tripping device may also actuate deluge valves and water curtains in the building or room affected.

4.24.6. Recommended safety chute dimensions and construction are: angle, 40-50 degrees with the horizontal; depth of chute, 24 inches; radius at bottom of chute, 12 inches. The lower end of the chute will not be over 24 inches above the ground. It will have enough of a horizontal run to prevent an injury to the employee because of the rate of fall (induced speed) during the exit.

4.24.6.1. Chutes 40 feet long require 6 feet of horizontal run.

4.24.6.2. The juncture of sections will be well-rounded and must overlap in the direction of travel.

4.25. Emergency Exits and Fire Escapes. Use the American National Standards Institute (ANSI) Safety Code A156.3, Building Exits, and NFC, Standard 101, Life Safety Code, as a guide in constructing emergency exits and fire escapes.

4.25.1. The rules for emergency exits, including safety chutes for explosives operating buildings, are the same as those in paragraphs 4.21 and 4.22.

4.25.2. Exterior fire escapes from a building with two or more stories must be of non-combustible material. They should be separated from the interior of the building by fire-resistant walls. Fire escape stairs will be arranged so they are exposed to the smallest number of window and door openings. All openings will be protected as required by the NFC, Standard 101.

4.26. Stairways. Stairways will conform with AFOSH requirements. Open-sided stairways in an explosives building (or in one where a dangerous fire hazard exists) must have handrails at least 42 inches high. It must have mid-railings to preclude falls when vision might be impaired by smoke, injury or when panic might result. Open risers should be avoided.

4.27. Fixed Ladders. Fixed ladders should conform to the ANSI Safety Code A14.3, Construction, Care, and Use of Ladders, and AFOSH Standard 127-22.

4.28. Platforms, Runways, and Railings. Platforms, runways, and railings should conform with AFOSH requirements.

4.28.1. Platforms and runways less than 30 feet long require one stairway or fixed ladder. Those over 30 feet long or more than 250 square feet in area require two stairways or ladders.

4.28.2. Platforms, floor openings, runways, tanks, or open vats comply with AFOSH 127-22.

4.28.3. Permanent railings should be of metal except in those process buildings where metal railings would increase the hazard.

4.29. Passageways. If weather-protected passageways (ramps) are needed between buildings or magazines, they should have suitable fire stops between the buildings.

4.30. Roads, Walks, and Gates.

4.30.1. Good all-weather roads should be provided to, and within, the explosives area.

4.30.2. There is no mandatory safety requirement for more than one personnel gate in the fence around an explosives area. The MAJCOM usually determines how many gates are needed after considering all elements of the situation. Consideration should be given to providing alternate personnel gate-ways for single event emergency.

4.30.3. Road systems serving groups of magazines or explosives buildings will be arranged without dead ends so that motor vehicles carrying explosives cannot be isolated. To prevent dead ending, interconnecting roads for magazine service roads need only be passable trails adequate to accommodate the typical vehicles used at the installation.

4.30.4. Roads serving a single magazine or explosives processing building (including its service facilities) may dead end at the magazine or building. The road system should be designed to eliminate the need for passing through an intermediate explosives when traveling between one operating area and another, within the same explosives (weapons) storage area.

4.30.5. Walkways and roads at the entrances to or between adjacent operating buildings containing explosives will be hard surfaced or boardwalks. These walkways and roads should be kept free from foreign material. Foot brushes, door mats, or scrapers should be provided at the entrance of each building, except magazines. Special attention will be given to passageways, walkways, and stairs which have been subjected to the effects of inclement weather.

4.31. Windows and Skylights. Inhabited building distances do not protect against glass breakage and the hazards of flying glass. Buildings housing administration areas, shops, and similar areas, separated by inhabited building distance, should not have windows and other large glass areas that face buildings where explosives are manufactured, processed,

handled, or stored. See paragraph 4.17.8 for additional information.

★4.31.1. Transparent, shatter resistant, slow-burning plastic which is practically smokeless may be used as glazing if an explosion could cause injury from falling or flying glass. For windows glazed with conventional glass, the hazard from falling and flying glass may be reduced by covering the inside with wire mesh screening, polycarbonate glazing, or protective window film application. Where plastic or mesh-reinforced windows are used, the base fire department should note this type construction on prefire plans to facilitate Fire-fighting personnel entry in emergency situations.

4.31.2. Windows in buildings having HC/D 1.3 explosives should be large enough to provide for release of pressure in the event of an explosion. The frame or sash should be of a suitable venting type. Shatter resistant-type glazing is recommended.

4.31.3. Skylights will not be used in buildings where explosives or ammunition are processed and should not be used in any buildings in an explosives establishment.

4.32. Drains and Sumps. When lines are required for draining liquid explosives or liquids containing explosive waste, they will be free of pockets and low spots. The drain line will be sloped at least one quarter inch per foot so that explosives will not settle in the drain line. The drain system will include a sump or basin so explosives can be removed.

4.32.1. Bolted sump tanks or other types of construction that allow the explosives to settle in obscure or hidden spaces are prohibited. Avoid any deposition of explosives from sump effluent due to drying, temperature changes, or interaction with other industrial contamination. Use sweeping and other dry-collecting measures to keep explosives which are appreciably soluble in water out of the drainage system.

4.32.2. Sumps will be designed so that suspended and solid explosive material that may settle cannot be carried in the wash waters beyond the sumps. They will be constructed so that the overflow will not disturb any floating solids. The design will allow enough settling time, based on the settling rate of the material and the usual rate of flow. It will allow the collected explosives to be removed easily and allow those which float on water to be retained until they can be skimmed from the water surface.

4.32.3. In all new construction, drains between the source of explosives and the sump will be troughs with rounded bottoms. The drains will have removable, non-sparking, ventilated covers for ease of inspection for accumulated explosives. Waste liquids will not be run into closed drains and sewers.

4.32.4. Drains will be inspected periodically and steps taken to prevent the buildup of explosive deposits. Drains and sewers containing explosive waste will not be connected to the normal sewage systems. All residue from hazardous material clean-up operations is considered hazardous waste and shall be disposed in accordance with AFI 32-7045 and AFPD 32-30.

4.33. Choosing and Installing Hardware.

4.33.1. To reduce the risk of accidental ignition by spark, consider the operational conditions in any hazardous location before choosing and installing hardware. Certain hazards may be sufficient to warrant the use of materials that will reduce the possibility of sparking. Therefore, special precautions must be taken for hardware having metal components which are used around exposed explosives.

4.33.2. Secure hardware firmly in place by using locking devices if it might become loose and enter into an explosives mix. This precaution is especially important in manufacturing and renovation operations.

4.33.3. Avoid installing hardware (including pipes and ducts) on light blowout-type walls and roofs. If it is necessary, select materials or items that will not yield heavy fragments in an explosion.

4.34. Tunnels. Tunnels must be drained, ventilated, well lighted, and have at least two exits. Water and steam service lines in tunnels will be lagged with suitable insulation. Tunnels between buildings that contain explosives will be built to resist the shock wave and blast of an explosion. Only authorized personnel will enter the tunnels.

4.35. Powerhouse Equipment. Powerhouse equipment, boilers, engines, and auxiliary equipment will be installed in compliance with the American Society of Mechanical Engineers (ASME), Boiler Code (includes Code for Unfired Pressure Vessels), the National Electrical Code, and other codes, regulations, or standards accepted as standard good practice.

4.36. Refrigeration. Refrigeration equipment (including air conditioning) must be installed as required by the ANSI Safety Code 89.1, Mechanical Refrigeration.

4.37. Laundries. Laundries should have facilities for washing and flame-proofing uniforms if such clothing is in use.

4.37.1. The facilities will include a safe place to store uniforms and rags that are contaminated with explosives before washing. Sumps will also be provided to remove explosives from waste water. There should be facilities available to test whether the contaminant (particularly any insoluble toxic substance) has been removed. Contact Environmental Management for assistance.

4.37.2. Commercial businesses laundering such articles will be informed of the nature of the explosives contamination and possible dangerous chemical reactions. Paragraph 4.37.1 applies.

4.38. Steam for Explosives Processing and Heating, Operations and Facilities. Steam used to heat operating buildings that contain explosives must never be hotter than 228 °F (108.9 °C). Process steam may exceed this if necessary but will not exceed 249.5 °F (120.8 °C). (Process steam is steam that is in direct contact with explosives or which, in case of equipment failure, would exhaust directly into contact with explosives or explosive fumes.)

4.38.1. Steam or hot water pipe surfaces in contact with wood, paper, or other combustible materials must never be hotter than 160 °F (71 °C). If the hot water pipes and the steam lines are hotter than this, they must be covered and painted with an impervious material or otherwise protected against direct or prolonged contact with these item.

4.38.2. Where a reducing valve is used, a relief valve should be installed on the low pressure piping. The production of superheated steam caused by the throttling action of reducing valves will be prevented by positive means, preferably by using a "water leg" or water column to control steam pressure of 5 psi or less.

4.38.3. Where close control of steam temperature is needed, indicating and recording pressure or temperature gauges should be installed. Such devices should be periodically tested and the test results recorded.

4.38.4. Where circulating hot water is used for heating, the installation and operating conditions will be according to AFM 88-8.

4.38.5. In explosives handling or storage locations here resistance to ground is high, steam or hot water lines should be grounded where they enter buildings.

4.39. Ventilation. Buildings where dust, fumes, or vapors (having explosive potential) are formed will be passively ventilated, usually at the source of the hazard. Air recirculation through these ventilation systems should not be designed without adequate measures for minimizing (eliminating) static discharge, including during the activation of manual or automated ventilation systems.

4.39.1. Exhaust fans through which combustible dust or flammable vapor pass will be equipped with nonferrous blades (or casting lined with nonferrous material) and approved motors. The entire ventilating system will be bonded electrically and grounded properly. The NFC, Standard 91, Blower and Exhaust Systems, may be used in the installation of such systems.

4.39.2. For buildings in which there is explosive dust, an air balance that gives a slight negative pressure within the building is required.

4.39.3. If air conditioning equipment is installed, it should be done as directed in the NFC, Standard 90A, Air Conditioning and Ventilating Systems, and Standard 90B, Warm Air Heating and Air Conditioning. Exhaust systems will be cleaned thoroughly, serviced on a regular schedule, and a log kept.

4.40. Electrical Equipment. The installation of electrical equipment within an explosives facility (building, magazine, shelter, and so forth) will comply with the National Electrical Code as a minimum, unless specified otherwise chapter 2, section D and Military Handbook 1008.

4.41. Outdoor Storage Sites. Outdoor storage sites will have a minimal slope, be well drained, and free from unnecessary combustible materials. The dunnage, supporting timbers, or platform on which explosives are stored will be built and placed to prevent falling, sagging, or shifting of the explosives. See specific item TOs.

4.41.1. To ensure stack stability and free circulation of air, adequate dunnage is needed, especially between the stack and an unimproved surface.

4.41.2. Nonflammable or fire-resistant, waterproofed, overhead covers will be provided for packaged explosive items unless the item is contained in packing designed and approved for unprotected outside storage.

4.41.3. There must be at least 18 inches between the top of the stack and the cover. If airspace is kept between the cover and the stacks, the sides of covered stacks may be protected by nonflammable or fire-resistant, waterproof covers.

4.42. Collection of Explosives Dusts.

4.42.1. Vacuum Collection. A "wet collector" which moistens the dust close to the point of origin and keeps it wet until the dust is removed for disposal is preferred. Explosive D should be collected in a dry system. More sensitive explosives (such as black powder, lead azide, mercury fulminate, tracer, igniter, incendiary compositions, and pyrotechnic materials) may be collected by vacuum in this manner. However, it must be kept wet, with compatible wetting agent close to the point of intake.

4.42.1.1. Vacuum (aspirator) systems must be arranged so each type of explosive is collected separately or so dissimilar hazards (for example, black powder with lead azide) are not mixed. Provision should be made for the proper liberation of gases that may be formed.

4.42.1.2. Vacuum systems used to collect these more sensitive materials should be used only for operations with fuzes, detonators, small arms ammunition, and black powder igniters.

4.42.2. Location of Dry-Type Collection Chambers**.** Dry-type explosive dust collection chambers, except as specifically provided for portable units, should be located outside operating buildings, in the open, or in buildings exclusively for the purpose.

4.42.2.1. There must be a protective barrier between the operating building and the outside location or separate building where the vacuum collection chamber is placed.

4.42.2.1.1. If the chamber contains 25 pounds of explosives or less, this barrier may be a dividing wall located at least 8 feet from the operating building.

4.42.2.1.2. If the chamber contains more than 25 pounds and is separated from the operating building by a 12-inch reinforced concrete wall, the wall must be separated from the operating building by a minimum of intraline distance.

4.42.2.1.3. If the barrier meets the requirements for operational shields or barricades (for the quantity of explosives in the vacuum collection chamber), it will be at a minimum of intraline distance to the operating building.

4.42.2.2. When it is not practicable to locate dry-type vacuum collection chambers outside the operating building, a separate room within the building may be set aside for the purpose. This room must not contain other operations and never be used as a communicating corridor or passageway between other operating locations within the building when explosives are being collected. If more than one collection chamber is to be placed in the room, the room will be subdivided into cubicles. Not more than one collection chamber will be in a single cubicle.

4.42.2.3. Dry-type portable vacuum collectors will not be placed in a bay or cubicle where explosives are present. If they do not contain more than five pounds of explosives, they may be placed outside the building or in a separate cubicle having dividing walls. If they contain more than five pounds, the requirement for stationary collectors will be met.

4.42.3. Location of Wet-Type Collection Chambers. If stationary and portable wet-type collectors do not contain more than five pounds of explosives, they may be placed in operating bays or cubicles. If placed in separate cubicles, the limits for each one may be 15 pounds. If they contain more than 15 pounds, the location requirements for dry collectors will apply.

4.42.4. Design and Operation of Collection Systems. Collection systems and chambers will be designed so that metal parts do not pinch explosives or explosive dusts. Pipes or tubes through which the dust travels should have flanged, welded, or rubber connections. Threaded connections are not allowed. The system will be designed to reduce accumulation of explosive dust in parts other than the collection chamber.

4.42.4.1. Long radius turns (centerline radius at least four times the diameter of the duct) will be used in the duct work. The number of points of application of vacuum should be kept to a minimum. Each room requiring vacuum collection should have a separate exhaust line to the primary collection chamber. Not more than two bays will be serviced by a common leader to the primary collection chamber. Wet primary collectors are preferred.

4.42.4.2. The vacuum line should be as short as possible from points of application of vacuum to the wet collectors. The number of wet primary collectors serviced by a single secondary collector should be kept at a minimum. Not more than two dry primary collectors should be connected to a single secondary collector (wet or dry-type). If an operation does not create an airborne concentration of dust, a manually operated suction hose to remove explosive dust is preferred. A permanent attachment increases the risk of propagation through the collection system should a detonation occur at the dust-producing machine.

4.42.4.3. Manually operated hoses should not be connected to explosive dust-producing machines. In dry vacuum collection systems, two collection chambers should be installed in series, ahead of the pump or exhaust. Wet collectors must provide for immersion of explosives to break up air bubbles, to release airborne particles, and to remove airborne moisture before it leaves the collector. This will keep moistened particles of explosives from entering the small piping between the collector and the exhaust or pump.

4.42.4.4. Explosives dust will be removed from the collection chamber at least once each shift to eliminate unnecessary and hazardous concentrations of explosives. The entire system should be cleaned weekly, dismantling the parts if necessary.

4.42.4.5. The entire explosive dust-collection system will be electrically grounded and the grounds tested semiannually.

4.43. Water Flow for Explosives Manufacturing Areas and Loading Plants. An outside, underground, looped system of mains, preferably cast iron, should be installed. The water distribution system will meet the requirements of AFM 88-10 and the NFC, Standards 1226 and 1231. Mains will be valved properly and will not extend under explosives locations.

4.44. Automatic Sprinkler Systems. Certain buildings in explosives manufacturing, surveillance, and inspection or ammunition workshop areas (for example, the receiving building in a load line) may require automatic sprinkler systems. The proper system should be determined by engineering studies of the hazards involved. Each system must be equipped with an audible warning device to alert personnel. Sprinkler systems in each building must be connected into the central alarm location. Sprinkler systems will be installed as prescribed in Military Handbook 1008 and the NFC, Standard 13.

4.45. Deluge Systems. Machinery or operations in which there is a process fire hazard will have an auto deluge system. Quick acting sensors such as ultraviolet detectors will be used. In addition, hand-operated, quick-acting deluge control equipment should be provided.

4.45.1. Deluge systems should be charged with steam, water, or chemicals. This depends on the expected character of the fire to be controlled, as determined by engineering studies of the hazards (NFPA, Standard 13, Sprinkler Systems, and Standard 16, Foam-Water Sprinkler and Spray Systems).

4.45.1.1. Control devices used should be actuated by rate or rise, fixed temperature, or their combination, as appropriate. If the system contains electrical components, the controls will be placed in enclosures approved by the National Electrical Code (NFPA 70).

4.45.1.2. If there are two or more deluge systems in the same fire area, supply mains and the arrangements and size of the system riser will provide each system with the required quantities of water per head.

4.45.1.3. A device will be installed on the supply side of the system so that it will actuate an audible warning device in affected operating areas when the pressure fails.

4.45.2. Operations protected by a deluge system should be stopped immediately if the system fails and should not be resumed until adequate protection is provided.

4.46. Maintenance and Repairs to Equipment and Buildings.

4.46.1. Conduct or obtain an appropriate safety analysis on all new equipment that interfaces with explosives before it is used in a hazardous environment. Examine and test newly repaired machinery to ensure its safe operating condition.

4.46.2. Before repairs are allowed on any equipment that has been exposed to contamination by explosive dust, etc., clean the equipment and tag it. The tag must be signed by the operating supervisor, certifying that all explosives have been removed. If it has been impossible to clean some part, note this on the tag, together with clear instructions to maintenance personnel on how to handle it safely.

4.46.3. Do not undertake major repairs or changes in a hazardous location during regular operations without removing the hazardous material. The consent of the supervisor in immediate charge of the building must also be obtained.

4.46.4. Before beginning repairs in an explosives location, the explosives location safety representative will inspect the area for the presence of explosives and dust, and provide for the removal of all hazardous materials. Remove all explosive residue material from equipment, crevices beneath floors, within walls and pipes, and under fittings where explosives may have collected. The area should be washed down thoroughly.

4.46.5. If machines and equipment have been oiled, repaired, or adjusted, remove all tools used for the repairs. All operators must inspect their equipment to be assured of its safe operating condition before resuming work.

4.46.6. When maintenance personnel enter buildings in which conductive shoes are required, wear conductive shoes or conductive overshoes with ankle straps. Because electricians are not allowed to work on live electrical equipment while wearing conductive shoes, remove all explosives before proceeding with the electrical work.

Section C--Assessing Risk by Knowing the Effects of Explosions

4.47. General. Explosives risk assessments are a subset of the commander's overall risk management program. An explosives risk assessment analyzes hazards associated with transporting, storing, disposing of, handling or firing ammunition and explosive materials. Operational Risk Assessments (AFPAM 91-214) may range from examining the relationship between a PES and an ES, to determine what effect one has on the other in the event of an accidental explosion, to ascertaining the worst credible event ramifications of an explosives handling mishap. Although risk assessments are required when explosives standards cannot be met, they should also be *routinely used* in other instances, as a commanders management tool. For example, combat loaded aircraft parked on an open ramp, separated by K11, meets the standard. Commanders should also be advised that in this situation, the total destruction of an adjacent aircraft is certain and that a delayed propagation is likely, in the event of an explosion on one of the combat loaded aircraft at the K11 separation. The commander should also be apprised of the probability of such an event happening.

4.47.1. Assessing Risk for Non Q-D Situations (Deviations). Because the scenarios are endless, there are no specific rules for doing risk assessments for non Q-D situations. Relying on the wisdom, knowledge and experience of the Weapons Safety Manager and others associated with the problem, coupled with common sense, is the wisest approach for these kinds of risk assessments.

4.47.2. Assessing Risk for Q-D Situations. The mathematical formula provided in paragraph 3.11 (also used for determining required Q-D separations) is used for assessing risk. In most cases, a given NEW and a known distance from the PES to the ES are used to derive the actual K-Factor. Dividing the distance by the cube root of the NEW will give the actual K factor of protection. K factors equate to a psi overpressure, see Table 4.1 below. Knowing the expected overpressure can help in understanding the facility or equipment damage and the personnel injuries expected to be sustained by a particular blast overpressure. Hazardous fragments, both primary and secondary, low angle and high angle, must also be considered when preparing a risk assessments. Refer to paragraphs 4.48. and 4.49 for specific information about blast and fragments.

4.47.3. Professional Assistance for Explosives Risk Assessments. Units may experience situations when engineering analysis is required to provide a credible risk assessment. There are numerous governmental and non-governmental organizations available for professional assistance. Contact your MAJCOM safety office.

4.48. Blast Pressure. The violent release of energy from a detonation in a gaseous medium results in a sudden pressure increase in that medium. The pressure disturbance, termed the blast wave or overpressure, is characterized by an almost instantaneous rise from the ambient pressure to a peak incident pressure (Pso). This pressure increase, or shock front, travels radially from the burst point with a diminishing velocity that always is in excess of the sonic velocity of the medium. Gas molecules making up the front move at lower velocities. This latter particle velocity is associated with a "dynamic pressure," or the pressure formed by the winds produced by the shock front. As the shock front expands into increasingly larger volumes of the medium, the peak incident pressure at the shock front decreases and the duration of the pressure increases If the shock wave impinges on a rigid surface, oriented perpendicular to or at an
angle to the direction of propagation of the wave, an additional reflected pressure instantly is developed on that rigid surface and the pressure is raised to a value that exceeds the incident pressure. This additional reflected pressure is (from that moment on) a function of the cumulative pressure in the incident wave and the pressure induced by the angle formed between the rigid surface and the plane of the initial shock front.

Table 4.1. K-Factor to PSI Relationship.

K-Factor	PSI	K-Factor	PSI	K-Factor	PSI	K-Factor	PSI
1.0	1000	7.0	20	20	3.0	33	1.5
1.2	763	8.0	15	21	2.8	34	1.4
1.4	597	9.0	12	22	2.6	35	1.4
1.6	475	10	9.6	23	2.4	36	1.3
1.8	384	11	8.0	24	2.3	37	1.3
2.0	315	12	6.8	25	2.2	38	1.25
2.5	200	13	5.9	26	2.1	39	1.2
3.0	135	14	5.2	27	2.0	40	1.2
3.5	95	15	4.7	28	1.9	45	1.0
4.0	70	16	4.2	29	1.8	50	0.9
4.5	53	17	3.8	30	1.7	60	0.7
5.0	42	18	3.5	31	1.63	70	0.6
6.0	28	19	3.2	32	1.56	80	0.5

4.48.1. Blast Effects when Facilities are Involved. When an explosion occurs within a structure, the peak pressure associated with the initial shock front will be extremely high, and in turn, may be amplified by its reflections with hardened surfaces in the structure. In addition, the accumulation of gases from the explosion will exert additional pressures and increase the load duration within the structure. The combined effects of these pressures may actually destroy the unreinforced structure because adequate venting for the expanding gas and the reflected shock pressures were not provided for in the original facility design analysis. For structures that have one or more strengthened walls, venting for relief of excessive gas or shock pressures, or both, may be provided by means of openings in or frangible construction of the facility walls or roof, or both. This type of construction will permit the blast wave from an internal explosion to spill over onto the exterior ground and building surfaces. These pressures(referred to as exterior or leakage pressures), once released from their confinement, expand radially and act near instantaneously on nearby structures or persons on the other side of the barrier.

4.48.2. Blast Effects for Hazard Class/Division (HC/D) 1.1 Explosives.

4.48.2.1. Conventional Structures. Conventional Northern tier structures are designed to withstand roof snow loads of 30 pounds per square foot (1.44 kilopascals) and coastal structures (exposed to annual hurricanes) are designed to withstand wind loads of 100 miles per hour (161 kilometers per hour). These loads each equate to 0.2 pounds per square inch (psi). Airblast overpressure at HC/D 1.1 barricaded intraline distance is 12 psi (82.7 kPa)(1728psf); at unbarricaded intraline distance is 3.5 psi (24 kPa) and at inhabited building distance is 0.9 to 1.2 psi (6.2 to 8.3 kPa). Although comparing these overpressure loads with the design capacity is not exactly the same, it is evident that conventional buildings will sustain extensive damage, even at inhabited building distance. The approximated damage to be expected at the various pressure levels described below are conservative estimates.

4.48.2.2. Earth-Covered Magazines. Earth-covered magazines provide virtually complete protection against propagation of explosions by blast, fragments, and fire; however, there may be structural failures in the magazines' concrete barrels and walls, possible severe damage of front walls, and damage to doors and ventilators. Munitions assets are expected to remain serviceable following an explosion in an adjacent earth covered magazine.

Table 4.2. Blast Effects.

IM (K6, 27 psi) Barricaded	1. Unstrengthened buildings will be destroyed completely. 2. Personnel at this distance or closer will be killed by direct action of blast, by being struck by building debris, or by impact against hard surfaces. 3. Transport vehicles will be overturned and crushed by blast. 4. Aircraft will be destroyed by blast, thermal, and debris effects. 5. Control. Barricades are effective in preventing simultaneous detonation by low angle fragments, but provide only limited protection against delayed propagation of explosion caused by fire resulting from high angle firebrands.
IM (K11, 8 psi) Unbarricaded	1. Unstrengthened buildings will suffer damage approaching total destruction. 2. Personnel are likely to be injured seriously by direct action of blast, by being struck by building debris, or by impact against hard surfaces. 3. There is a 20-percent risk of eardrum rupture. 4. Aircraft will be damaged heavily by blast and fragments; destruction by ensuing fire is likely. 5. Transport vehicles will sustain severe body damage, minor engine damage, and total glass breakage. 6. Barricading will reduce significantly the risk similtaneous detonation and injury of personnel by fragments.
IL (K18, 3.5 psi)	1. Direct propagation of explosion is not expected. 2. There is some possibility that delayed communication of an explosion may occur from fires, or as a result of equipment failure at the ES. ★3. Damage to unstrengthened buildings will be of a serious nature and approximately 50 percent or more of the facility will be lost. Sensitive electronic equipment is expected to stop functioning. 4. There is a 1-percent chance of eardrum damage to personnel. 5. Personnel injuries of a serious nature [including some fatalities] are likely from fragments, debris, firebrands, or other objects, including the structural failure of building walls and roofs 6. Aircraft can be expected to suffer considerable structural damage from blast. Fragments and debris are likely to cause severe damage to aircraft at K18. 7. Transport vehicles will incur extensive, but not severe, body and glass damage consisting mainly of dishing of body panels and cracks in shatter resistant window glass. 8. Control. Many situations arise in which control of pressure by suitably designed suppressive construction at the PES or protective construction at the ES are practical. Use of such construction to withstand blast overpressure is encouraged if it is more economical than distance alone, or if sufficient distance is not available to prevent the overpressure from exceeding this level.
PTR (K24, 2.3 psi)	1. Unstrengthened buildings can be expected to sustain damage. Approximately 20 percent of the building must be replaced. 2. Occupants of exposed structures may suffer temporary hearing loss, or injuries from secondary blast effects such as building debris projectiles and the tertiary effect of building feature displacements (collapsed window and door hardware, and roof and/or wall partitions). 3. Personnel in the open may be injured directly by the blast, if thrown against rigid objects or buildings. There can be fatal personnel injuries caused by fragments, debris, and structural failures. The extent of personnel injuries depends on the construction and strength of the PES structure, the amount of ammunition detonated, and its fragmentation characteristics. 4. Vehicles on the road should suffer little damage unless hit by a fragment or unless the blast wave causes momentary loss of control. 5. Aircraft should suffer some damage to appendages and sheet metal skin from blast and possible fragment penetration; however, the aircraft should be operational with minor repair. 6. Control. The risk of injury or damage due to fragments for limited quantities of explosives at the PES can be reduced by barricading. Many situations arise in which control of pressure by suitably designed suppressive construction at the PES or protective construction at the ES are practical.
PTR (K30, 1.7 psi)	1. Unstrengthened buildings can be expected to sustain damage, approximately 10 to 15 percent of the building will require replacement. 2. Occupants of unstrengthened structures may suffer injury from the secondary effects of the buildings structural failure or from driven debris projectiles (window glass, window mullions, window and door hardware, and collapsed roof or wall partitions). 3. Aircraft in landing and takeoff status may lose control and crash. 4. Parked military and commercial aircraft likely will sustain minor damage due to blast but should remain airworthy 5. Personnel in the open are not expected to be killed or seriously injured directly by blast. There may be some personnel injuries caused by fragments and debris, depending largely upon the PES structure and amount of ammunition and fragmentation characteristics thereof. 6. Control. The risk of injury or damage due to fragments for limited quantities of explosives at the PES may be reduced by barricading or application of minimum fragment distance requirements.

Table 4.2 Blast Effects (Continued)

IB (K40, 1.2 psi)	1. Unstrengthened buildings can be expected to sustain damage up to about 5 percent of the building must be replaced. 2. Personnel in buildings are provided a degree of protection from death or fatal injury. 3. Personnel in the open are not expected to be injured seriously directly by the blast. Personnel injuries from projectile fragments and the failure of the exposed facility (including the possibility of fatalities) will depend upon the PES structure, the amount of ammunition, their fragmentation characteristics, and the strength of the ES structure. 4. Control. Glass breakage and structural damage can be reduced by means such as orientation between the PES and the ES, and by keeping the surface area of exposed glass panels to a minimum. The use of blast-resistant, reinforced glass windows is recommended.

4.48.2.3. Barricaded Open-Storage Modules. Barricaded open-storage modules provide a high degree of protection against propagation of explosion by blast and fragments. However, if flammable materials are present in nearby cells, subsequent propagation of explosion by fire is possible. In the event of an unplanned detonation in an adjacent cell, munitions at K1.1 will be covered with earth and unavailable for use until extensive uncovering operations and possibly maintenance are completed. Items at K2.5 separations are expected to be readily accessible.

4.48.2.4. Blast Effects for Specified K-Factors and PSI Overpressures. Table 4.2 outlines expected blast effects for various levels of pressure.

4.49. Fragments. An important consideration in the analysis of the hazard associated with an accidental explosion is the effect of fragments generated by the explosion. These fragments are classified as primary or secondary depending on their origin.

4.49.1. Primary fragments are formed as a result of the shattering of the explosives container. The container may be the casing of conventional munitions, the kettles, hoppers, and other metal containers used in the manufacture of explosives; the metal housing of rocket engines; and similar items. These fragments usually are small in size and travel initially at velocities of the order of thousands of feet per second.

4.49.2. Secondary fragments are formed as a result of high blast pressures on structural components and items in close proximity to the explosion. These fragments are somewhat larger in size than primary fragments and travel initially at velocities in the order of hundreds of feet per second.

4.49.3. A hazardous (life threatening) fragment is one having an impact energy of 58 ft-lb (79 joules) or greater.

Chapter 5

EXCEPTIONS

5.1. General Information. Depart from the requirements of this manual only when there are strategic or compelling reasons to do so. Make this determination after a complete analysis of the mission, explosives requirements, and facilities. Ease of operation is not a reason for requesting an exception. This chapter explains how to request and manage authorized departures from the requirements of this manual.

5.2. Definitions and Basic Guidance.

5.2.1. *Exception* is the inclusive term for any departure from the requirements of this manual. Exceptions are further divided into waivers, exemptions and deviations. Document as prescribed in paragraph 5.7.3.

5.2.2. *Waivers* apply to relatively short-term violations of the Q-D requirements of this regulation. Five years or less is considered short-term. Include the proposed corrective action and anticipated get well date on all waiver requests. Waivers resubmitted as exemptions will be approved by the next higher level of command.

5.2.3. *Emergency Event Waiver* has the same definition as a waiver, except arises unexpectedly and there is not enough time to comply with formal waiver submission procedures. It must not be used as a replacement for proper planning.

★5.2.3.1. The responsible commander may approve a waiver for the length of the emergency but not to exceed 72 hours. Fax a copy of the approved request to MAJCOM and AFSC/SE. If the waiver can not be corrected within 72 hours submit a formal waiver. This one time emergency waiver cannot be repeated. Recurring situations require an exception (waiver, exemption, or deviation) reviewed/approved by the appropriate level (such as MAJCOM or SECAF.)

5.2.3.2. An emergency event waiver does not apply to violations for munitions which are specified in a contingency plan or where there is a reoccurring requirement.

5.2.4. An *exemption* is a relatively long-term (greater than 5 years) or permanent departure from the Q-D standards. Include the proposed action and anticipated get well date on all exemption requests.

★5.2.5. *Deviations* apply to non-Q-D departures from the requirements of this Manual. Basically, chapter 2 of this manual contain non-Q-D standards. MAJCOMs determine approval levels for deviations. Use a memorandum for requesting deviations. Deviations will be reviewed every three years.

5.2.6. Exceptions need not be submitted when compensatory measures can be taken (i.e., temporarily reducing the authorized NEW of a PES) that will avoid a violation. Document as prescribed in paragraph 5.7.3. Commanders sign ESP's containing compensatory measures.

5.2.7. The MAJCOM weapons safety office and the host base weapons safety office maintain copies of current waivers, exemptions, and deviations.

5.3. Approval Levels. All planned construction or exposures to non-DoD civilians or off base resources, not meeting Q-D standards, must be approved by the Secretary of the Air Force (SECAF). Additionally, an action which places an existing facility that was constructed within the past three years at less than prescribed distances from a PES requires SECAF approval. The Air Force Chief of Safety may deviate from this requirement on a case-by-case basis. Approval of all other violations will be at the MAJCOM CC or CV level. For Unified Command support, the Major Air Component Commander or Vice Commander having operational control of the Air Force units, is the approval authority for non-SECAF waivers and exemptions.

5.3.1. Deviations. MAJCOM determines approval level.

5.3.2. Override Authority. The Air Force Chief of Safety may elevate any exception to the Air Force Chief of Staff for final approval or for information purposes.

5.3.3. Out of Continental United States (OCONUS) Locations. Host nation military personnel must be provided the same level of protection as U.S. troops. Host nation commanders must approve Q-D violations of U.S. Air Force standards to their troops. Also, where international treaties or status of forces agreements require it, host nation approval must be obtained.

5.4. Reviews. Periodic reviews of violations have a four-fold purpose: to confirm the continued existence of the violation; to check the accuracy of the data associated with the violation; to insure the violation still exists because of strategic or compelling reasons, and to ensure compensatory actions/stipulations are still in force. Reviews should consider all possible alternatives for eliminating or lessening violations.

5.4.1. Periodic Reviews. Existing waivers will be reviewed annually on the anniversary of the approval date. Exemptions will be reviewed every three years on the anniversary of the approval date. Reviews may be accomplished early to spread out workloads.

5.4.2. Conducting the Review. Use the BEEM database and reports to conduct reviews. Reviews should be a team effort involving the users of the PES, the ES, the Civil Engineer (CE), and Safety. Verify or update each data field and record status of corrective actions in the comments block. Use the BEEM short form report, attached to a staff summary sheet to obtain commander review acknowledgment. (Violations deleted since the last review should be noted in the staff summary sheet since they will not appear in the BEEM report.)

5.4.3. Approval Levels for Reviews. All violations will be reviewed by MAJCOM. If the PES or ES data identified in SECAF violations change, submit the review to the Office of the Secretary of the Air Force through the AFSC.

★5.5. Preparing Exemptions and Waivers. Include PES/ES relationships not meeting Q-D in ESPs. Assign a waiver or exemption number to each violation. See Attachment 4 for identifying violations on the AF Form 943

5.5.1. Compelling or Strategic Reasons. Each request to depart from Q-D criteria must include a narrative explanation outlining the reason why the explosives standards could not be met. This narrative may be on the AF Form 943, the site plan transmittal letter, or on a separate memorandum. In order to comply with the DoD requirement of "strategic or compelling" reasons for requesting an exception, include a discussion of reasonable alternatives considered and rejected. Examine every feasible corrective action and cost estimate, prior to submitting site plans with violations. This review will be a team effort involving installation safety, civil engineering, and other agencies affected by the violations. Installation safety will keep documentation, describing the alternatives considered. If violations are not correctable, list the reasons in the site plan, and state that cost estimates are therefore not applicable. Attachment 5 is a sample memorandum for requesting an exception.

5.5.2. Secretary of the Air Force Waivers and Exemptions. To expedite processing of these packages through Air Staff and SECAF offices, a standardized format is essential. Because the reviewing/approving officials are, for the most part, not trained in weapons safety, additional information is required to ensure decision makers have the facts to make the best decisions. Units/MAJCOMs seeking SECAF approval for violations will assemble request packages using the following format:

5.5.2.1. Tab 1. MAJCOM/CC or CV memorandum. Use Attachment 5 as a format for this memorandum.

5.5.2.2. Tab 2. Maps. Provide the normal map for the explosives site plan according to paragraph 4.11.4. Additionally, submit a map which clearly shows the specific violations the SECAF will be approving. This map should be 8 1/2" x 11" to allow for reproduction and staffing. If larger maps are required for clarity's sake, submit seven copies. Use separate colors to delineate between MAJCOM- and SECAF-approved violations. Where existing explosive clear zones are changing, show both the old and new.

5.5.2.3. Tab 3. AF Form 943. Clearly show which siting pairs are without violation, which are in violation and require SECAF approval, and which have received MAJCOM/CC or CV approval. Refer to Attachment 4, Figure A.4.1 for specific guidance on the AF Form 943.

5.5.2.4. Tab 4. The Specific Standard Violated. Provide enough information to acquaint a "non-safety" person with the reason for the violation(s) the SECAF is being asked to approve. Use highlighted, photocopied pages from the specific explosives safety standard to explain the type of separation required (e.g., IB, PTR) and the required distance or how the distance is calculated (e.g., Q-D distance criteria table, fragment distance criteria, etc.).

5.5.2.5. Tab 5. Justification. In narrative form, provide a detailed explanation of the "strategic or compelling" reason which drives the need for the SECAF approval. Use specific references to aircraft sortie rates or other pertinent data to justify the type, quantity, and placement of explosives at the potential explosion site (PES). Additionally, fully justify the position of the violated exposed site (ES). Provide any additional information, such as higher headquarters inspection findings or limiting factors (LIMFACs) which substantiate the request.

5.5.2.6. Tab 6. Effects of a Mishap. Using the information in paragraph 4.47 through 4.49 and Table 4.2, assess the results of an explosive mishap. Consider the level of damage over and above what would normally be considered acceptable under explosives safety standards. If off-base or non-DoD personnel or resources are at risk, discuss the possible political repercussions of a mishap.

5.5.2.7. Tab 7. Corrective actions. Discuss any and all actions taken to mitigate the effects of an explosives mishap. Consider such things as building techniques, barricading, glass protection, tiered siting, or planned construction. If new construction or the movement of operations is planned, discuss the timelines and funding sources involved. Be specific.

5.5.2.8. Tab 8. Options. Discuss fully, all options considered by the unit but rejected in favor of the proposed action. Give details as to why each of the other options was not chosen, discussing limitations to funding, real estate, or other constraints, as appropriate.

5.5.3. Base Explosives Exemption Matrix (BEEM) Report. See paragraph 5.7 below for an explanation of BEEM. Include a copy of the BEEM Short Form report for the entire installation, which will allow approval authorities to assess the impact of the requested exception in light of existing violations and overall impact on the mission in the event of a mishap.

★5.6. Processing Waivers and Exemptions. Forward ESPs with violations through command channels to the Air Force Safety Center. Each level of review scrutinizes the package for validity. Return packages failing to meet the test of strategic or compelling need, or omitting a discussion of reasonable alternatives considered and rejected. See paragraph 5.5.1 above. Operations involving violations must not be allowed until the violations are approved by MAJCOM. Approved explosives waiver and exemption documents are FOR OFFICIAL USE ONLY information subject to the marking and handling controls of AFI 37-131. The disclosure authority for agencies outside the DoD is HQ USAF/SE. Send requests for release under the Freedom of Information Act to HQ AFSC/JA, 9700 Avenue G SE, Kirtland AFB NM 87117-5670.

5.7. Base Explosives Exception Matrix (BEEM). BEEM is a Paradox database created and distributed by AFSC in 1995. MAJCOMs and bases with explosives exemptions or waivers have BEEM loaded in their computers. The cornerstone of BEEM is categorizing violations according to risk. Knowing which violations carry the greatest risk can, in turn, drive risk reduction efforts.

5.7.1. The BEEM Method of Counting Violations. Each PES and ES not meeting Q-D is considered a paired relationship and counted as one(1) violation. For example, if one PES drives violations to three ESs, BEEM logs this as three violations. If one ES is in violation to five PESs, BEEM logs this as five violations. Groups of PESs, such as a row of combat loaded aircraft, are un-grouped when entering them into BEEM. Each individual PES and ES is entered into BEEM separately.

5.7.2. Categorizing Violations. Violations entered into BEEM will be categorized according to the impact the violation has on either the mission of the wing or the expected harm to people. There are five impact categories to select from, CATASTROPHIC, CRITICAL, SERIOUS, MODERATE, NEGLIGIBLE. See Table 5.1 for definitions of each category. ***NOTE:*** The impact category is based on the damage expected at the ES from an explosion at the PES. Coordinate your impact category decision with all applicable organizations.

5.7.2.1. Step 1. Review the Accepted Risk. Using paragraphs 4.48 and 4.49 ascertain the risk to the ES from the PES if the Q-D requirements were met. In other words, pretend the facility is moved back just enough, in order to meet Q-D, then consider the damage and injuries. ***NOTE:*** Categorizing violations in BEEM recognized the fact that meeting the Q-D requirements of this manual does not eliminate risk. For example related personnel located at K18 are not safe from serious injury. Depending on the facility, fatalities may occur at K18. Likewise, working or living outside the IBD clear zone does not mean total protection. For example a Military Personnel Flight (MPF) facility with windows facing the PES, and just outside the clear zone may get hit with a blast wave overpressure of 1.2 psi. At this distance unstrengthened windows will shatter, injuring many of the occupants.

5.7.2.2. Step 2. Determine Actual Risks. Calculate the actual K-factor using the K-factor formula. Using Table 4.1 determine the psi overpressure expected at the ES. Visit the PES and ES to assess factors such as: building debris from the PES, the type of munitions expected at the PES, natural and artificial barricades, including intervening facilities; the

construction characteristics of the ES, its angle from the PES, location and type of windows etc. Use this data to ascertain the expected damage to the ES and injuries to its occupants.

5.7.2.3. Step 3. Compare the difference. What is the *additional* damage or injuries expected at the ES? Example: An explosion occurs on a combat loaded aircraft. Even if all Q-D is met, the following results are likely: flying operations will be disrupted, maintainers and operators in the immediate area will be killed, some related facilities may be unusable for a day or so, some people inside related facilities may be fatally injured. For purposes of this example, let's assume a related facility is located at K14 instead of the required K18. Using Table 4.1 we realize this increases the psi overpressure from 3.5 to 5.2. Depending on the type of construction, this 67% increase in overpressure will likely destroy the facility and significantly increase the probability of fatalities.

5.7.2.4. Step 4. Selecting the Impact Category. Using the definitions in Table 5.1 below, select the category that most closely resembles the results of step 3 above. Although selecting the impact category is subjective, it is not arbitrary. For example, using the scenario outlined in Step 3 above, either category 1-CATASTROPHIC or 2-CRITICAL would be selected based on the effect the violation would have on individuals. Further differentiating between CATASTROPHIC and CRITICAL may depend on the function of the ES. A destroyed tire shop may cause you to select 2-CRITICAL, whereas a destroyed flight operations facility would result in a 1-CATASTROPHIC categorization.

5.7.2.5. The Commanders' Tool. Categorizing each violation according to the impact that violation has on the base's mission allows the commander to make wise policy decisions. Violating Q-D is a combat survivability issue. Getting accurate violation information to the commander is critical to the success of the mission.

5.7.3. Keeping BEEM Current. All Q-D violations are loaded into BEEM. Changes, additions or deletions are modified in the program as they occur. Updated databases can be exported and e-mailed to your MAJCOM as they occur.

Table 5.1. BEEM Impact Categories.

	1 CATASTROPHIC	2 CRITICAL	3 SERIOUS	4 MODERATE	5 NEGLIGIBLE
Definition: Damage beyond acceptable levels will cause . . . .:	All, or nearly all operations curtailed for one or more days. OR Near certainty of additional disabling injuries or deaths.	All, or nearly all primary operations temporarily interrupted. OR High probability of additional serious injuries or deaths	Primary operations temporarily disrupted. OR Expectation of significant additional serious injuries	Minor disruption of operations. OR Possibility of moderate increase in nature or number of injuries	Operations are unaffected. OR Minor or no additional injury likely

---

Chapter 6

REAL PROPERTY CONTAMINATED WITH AMMUNITION AND EXPLOSIVES.

6.1. General. Every means possible shall be used to protect the general public and the environment from exposure to ammunition and explosive hazards. This includes all explosive hazard areas, suspected or known to exist, on real property currently or formerly under USAF ownership or control.

6.1.1. This chapter contains policies and procedures necessary to provide protection to personnel and the environment as a result of ammunition, explosives or chemical agent contamination of real property currently and formerly owned, leased, or used by the Air Force.

This chapter requires identification and control measures that are in addition to, not substitutes for, those generally applicable to USAF real property management.

6.1.2. USAF real property may be contaminated with ammunition and explosives as the result of past operations such as manufacturing, weapons firing, waste collection or disposal including pads, pits, basins, ponds, streams, burial sites, and other such operations.

6.1.3. AFI 32-9004, Disposal of Real Property, which is managed by HQ AFREA/MI, addresses contaminated real property (ATTACHMENT TO A2.16.2, Section A2.16, Hazardous Ordnance Contaminated Land). Activities associated with the disposal of contaminated real property should be coordinated with the installation civil engineer's real estate division representative. Whenever disposal is contemplated, an Environmental Baseline Survey must be conducted to identify any hazardous conditions associated with the subject property, including unexploded ordnance and other hazardous materials.

6.2. Disposal. Contamination of real property by disposal of ammunition, explosives, or chemical agents is prohibited. This prohibition includes disposal by land burial, discharge into watersheds, sewers, streams, lakes, or waterways. This policy does not include burial to control fragments during authorized destruction operations by detonation when in compliance with applicable statutes and regulations.

6.2.1. USAF real property that is known to be contaminated with ammunition and explosives that may endanger the general public cannot be released from custody until the most stringent efforts have been made to ensure appropriate protection of the public (AFI 32-9004, see 6.1.3 above). Some contamination areas are so extensive that removal of the hazard is beyond the scope of existing technology and resources. Such properties shall be retained until they can be made harmless

6.3. Identification and Control at Active Installations.

6.3.1. Permanent records will be created and maintained by the base civil engineer to clearly identify all areas contaminated with ammunition and explosives, and will be maintained by each installation. These records will indicate, to the extent possible, positive identification of the ammunition and explosives contamination by nomenclature, hazard, quantity, and exact location. All decontamination efforts will be similarly detailed.

6.3.2. If the installation is inactivated, the records will be transferred to an office designated by HQ USAF/CE to ensure permanent retention.

6.3.3. All contaminated locations will be placarded appropriately with permanent signs that prohibit entrance of unauthorized personnel. These signs will be multilingual, when appropriate, and maintained in a legible condition.

6.3.4. Active firing ranges, demolition grounds, and explosives test areas will be assumed to contain unexploded ordnance or explosive materials and will be controlled accordingly.

6.4. Active Installation Land Disposal.

6.4.1. Plans for leasing, transferring, or disposing of USAF real property (see AFI 32-9004) when ammunition and explosives is present, or is suspected to be present, will be submitted through command safety channels to HQ AFSC/SE, for submission to the DDESB for review and approval.

6.4.2. Land disposal submissions will state the intended end use of the property; the nature, extent and location of on- and off-base unexploded ordnance; improvements; proposed detection plan and degree of decontamination; and the extent to which the property may be used safely without further decontamination.

6.4.3. When accountability and control of USAF real property containing ammunition and explosives is transferred to another Service, or a non-DoD activity, the action will be accompanied by a transfer of the permanent records of contamination.

6.4.4. Ammunition, explosives, or chemical agents shall be removed until an acceptable level of protection, based upon the anticipated use of the property, is reached.

6.4.4.1. Transfer records will detail past ammunition and explosives introduction, describe decontamination efforts, provide residual contamination information, and advise the user not to excavate or drill in residual areas without a metal detection survey.

6.4.4.2. This information will be enclosed with the report of excess and entered in the permanent land records of the civil jurisdiction where the property is located.

6.4.5. Limited-use land transfers can be arranged with other federal agencies for compatible use of real property containing unidentified explosive ordnance(UXO), such as wildlife refuges, safety zones for federal power facilities, or other purposes not requiring entry except for authorized federal personnel. These landgrants will include all restrictions and prohibitions concerning use of the property to ensure appropriate protection of federal personnel and the general public.

6.5. Remediation of Formerly Used Defense Sites (FUDS).

6.5.1. The MAJCOM will develop procedures to safely remediate those FUDS containing ammunition, explosives or chemical agents. The remediation plans will be provided to HQ AFSC/SE for review and approval. Priority will be given to the remediation of sites which pose an immediate public risk.

6.5.2. HQ AFSC/SE will submit a copy of the remediation plans to the DDESB for review and approval.

6.5.3. Remediation plans must identify the type of UXO suspected; the techniques to be used to verify the contamination; a risk assessment; and a description of the measures that will be taken to protect workers, the public, and the environment during the contamination assessment, cleanup and disposal phases of the operation. The degree and extent of contamination, an assessment of the potential for contamination migration, and implementation of steps to halt such migration will be included in the remediation plans.

6.5.4. Significant hazards that arise during any phase of the remediation process will be brought to the immediate attention of the MAJCOM safety and civil engineering staff and HQ AFSC/SE. Changes to approved plans or procedures will be coordinated with those agencies involved in the original approval process and forwarded to HQ AFSC/SE prior to implementation.

6.6. Mineral Exploration and Extraction.

6.6.1. Ammunition and explosives facilities.

6.6.1.1 Mineral exploration and drilling activities are to be separate from ammunition and explosives operating and storage facilities by:

6.6.1.1.1. Public traffic route explosives safety distances if the site is not occupied by personnel during exploration or after drilling is completed.

6.6.1.1.2. Inhabited building explosives safety distance if occupancy is to continue after completion of operations. If chemical agents or munitions are known or suspected to be present, public exclusion distance (K328) must be maintained to the exploration or drilling activities. Examples of drilling activities are those for exploration or extraction of oil, gas, and geothermal energy.

6.6.2. Exploration, drilling, and mining are prohibited on the surface of lands containing explosives. Exploration and extraction is permitted by directional (slant) drilling at a depth greater than 50 feet beneath the explosives contaminated land surface or by shaft mining at a depth greater than 100 feet beneath such land surface.

6.6.3. Installations will submit plans for mineral exploration and extraction on land in proximity to land that is contaminated or suspected to be contaminated with ammunition, explosives or toxic chemical agents. Plans will be forwarded through command channels to HQ AFSC/SE for submission to the DDESB for safety review and approval.

6.7. Real Property Contaminated With Ammunition and Explosives.

6.7.1. Don't bury explosives, munitions residue, or chemical agents. Base civil engineering must placard sites formerly used for this
purpose with warning signs and fence where possible. Prevent personnel from entering known or suspected
UXO areas. Ensure locations of known or suspected contamination are identified on the base comprehensive plan and included in base real property records (see AFI 32-9004).

6.7.2. Fencing and Placarding. Fences and signs must meet the requirements of AFI 31-209, *Air Force Resource Protection Program* or AFI 31-101, *Air Force Physical Security Program*.

6.7.3. When UXO exists, use the following guidelines:

6.7.3.1. Safety must work with base civil engineering (CE), historian, and MAJCOM safety staff to determine past
property use throughout the history of the installation. Review old files, land use records, maps, and site plans.

6.7.3.2. If UXO is suspected, base civil engineering will request an explosive ordinance disposal (EOD) survey team through the MAJCOM.

6.7.3.3. Should CE or the EOD survey team determine no UXO exists, the MAJCOM Chief of Safety will document that fact by letter to HQ AFSC/SE with an analysis of the research leading to that conclusion.

6.7.3.4. Submit clearance remediation plans through MAJCOM/SE and HQ AFSC/SE for DDESB approval following the EOD survey and prior to beginning operations. Clearance plans must include:

6.7.3.4.1. Summary of research sources and survey team investigation.

6.7.3.4.2. Descriptions of areas to be cleared.

6.7.3.4.3. Appropriate maps.

6.7.3.4.4. Future intended use of the land and any planned restrictions on use.

6.7.3.4.5. Clearance procedures to be used.

6.7.3.4.6. Possible environmental issues.

6.7.3.4.7. Support required by the unit.

6.7.3.5. Once clearance is complete, ensure two copies of the Certificate of Clearance and Report of Clearance are sent to HQ AFSC through MAJCOM/SE.

6.7.4. For additional policy, references and guidance, consult:

6.7.4.1. MAJCOM or HQ US Air Force civil engineer (see AFI 32-9004) staffs in real property, environmental and explosives ordnance disposal.

6.7.4.2. HQ Air Force Base Disposal Agency.

6.7.4.3. Air Force Center for Environmental Excellence.

6.7.4.4. HQ Air Force Safety Center (SE).

6.7.4.5. DoD 6055.9-STD.

6.7.4.6. MAJCOM and HQ AFMOA bioenvironmental engineering staffs (BES).

FRANCIS C. GIDEON, JR.
Major General, USAF
Chief of Safety

GLOSSARY OF ABBREVIATIONS, ACRONYMS AND TERMS

Abbreviations and Acronyms

AFMC	Air Force Materiel Command
AFOSH	Air Force Occupational Safety and Health
AFRC	Air Force Reserve Command
AGE	Aerospace Ground Equipment
ALC	Air Logistics Center
ALCM	Air Launched Cruise Missile
AMRAAM	Advanced Medium-Range, Air-to-Air Missile
ANG	Air National Guard
ANSI	American National Standards Institute
ASME	American Society of Mechanical Engineers
AUR	All-Up-Round
AWG	American Wire Gauge
BEEM	Base Explosives Exemption Matrix
BES	Bioenvironmental Engineering Services
BRU	Bomb Rack Unit
BTO	Base Transportation Officer
cal/cm2	Calories Per Square Centimeter
CBR	Chemical Biological Radiological
CBU	Cluster Bomb Unit
CFA	Controlled Firing Area
CFR	Code of Federal Regulation
CNU	Container Unit
COE	Corps of Engineers
CONUS	Continental United States
CSC	Central Security Control
DBMS	Director of Base Medical Services
DDESB	DOD Explosives Safety Board
DFARS	Defense Federal Acquisition Regulations Supplement
DoD	Department of Defense
DOT	Department of Transportation
EED	Electroexplosive Devices
EIDS	Extremely Insensitive Detonating Substances
EMR	Electromagnetic Radiation
EOD	Explosive Ordnance Disposal
EOR	End of Runway
ERO	Engine Running On/Off
ERP	Effective Radiated Power
ES	Exposed Site
FAA	Federal Aviation Administration
FACC	Fire Alarm Communication Center
FAE	Fuel-Air-Explosives
FAR	Federal Acquisition Regulation
FLIP	Flight Information Publication
GP	General Purpose
HARM	Hi-Speed, Antiradiation Missile
HAS	Hardened Aircraft Shelter
HC	Hexachloroethane
HE	High Explosive
HEI	High Explosive Incendiary
HMMV	Highly Mobile Motorized Wheeled Vehicle
IB	Inhabited Building
IFR	Instrument Flight Rules
IHE	Insensitive High Explosive
IL	Intraline
IM	Intermagazine
JROD	Jet Remote Opening Device

kg	Kilogram
kv	Kilovolt
LCF	Launch Control Facility
LCL	Less Than Carload
LF	Launch Facilities
LOX	Liquid Oxygen
LP	Liquefied Petroleum
m	Meter
MAJCOM	Major Command
MCE	Maximum Credible Event
MCP	Military Construction Program
MER	Multiple Ejector Rack
MHT	Minuteman Handling Team
mm	Millimeter
MSA	Munitions Storage Area
MWR	Morale, Welfare, and Recreation
NATO	North Atlantic Treaty Organization
NEC	National Electric Code
NEW	Net Explosives Weight
NFPA	National Fire Protection Association
NGB	National Guard Bureau
NSN	National Stock Number
OI	Operating Instruction
OSHA	Occupational Safety and Health Administration
PDC	Programming, Design and Construction
PES	Potential Explosion Site
POL	Petroleum, Oil and Lubricants
POV	Privately Owned Vehicle
psi	Pounds Per Square Inch
PTR	Public Traffic Route
PWP	Plasticized White Phosphorus
Q-D	Quantity-Distance
QA	Quality Assurance
R-F	Radio-Frequency
RFTF	Response Force Tactical Facility
RPV	Remotely Piloted Vehicle
RSCA	Rocket Storage, Checkout, and Assembly
RSU	Runway Supervisory Unit
SCBA	Self-Contained Breathing Apparatus
SCPS	Survivable Collective Protection System
SOFA	Status of Forces Agreement
SPO	System Program Office
SSCBM	Shipping and Storage Containers, Ballistic Missile
STAMP	Standard Air Munitions Package
TE	Transporter Erector
TER	Triple Ejector Rack
TLV	Threshold Limit Value
TM	Technical Manual
TO	Technical Order
TOFC	Trailers on Flat Cars
TP	Target Practice
UL	Underwriters Laboratories
UN	United Nations
VFR	Visual Flight Rules
WCDO	War Consumables Distribution Objective
WP	White Phosphorus
WRM	War Reserve Materiel
WSA	Weapons Storage Area

Terms -- Definitions

The following terms and phrases commonly used in explosives safety operations are described here to provide uniformity. Use standard and service dictionaries for other terms. Also see MIL-STD-444, Nomenclature and Definitions in the Ammunition Area.

Aboveground Magazine. Any building or structure, except an operating building, used for the storage of explosives. Magazines are of two general types: igloo (earth-covered) and aboveground (no earth covering). An aboveground magazine is any structure or facility, without sufficient earth covering, used for the storage of explosives. For igloo see "Earth-covered Magazine". Also includes open air munition stocks, trucks, trailers, railcars or cargo aircraft loaded with explosives.

Administration Area. The area in which administrative offices for the entire organization are located, excluding those offices located near and directly serving explosives storage and operating areas.

Aircraft Battle Damage Repair Sites. These are sites where battle damage is simulated on aircraft hulls by detonating up to two ounces of explosives packed inside a length of steel pipe.

Aircraft Explosives Cargo Parking Area. Any area, commonly called a hot cargo pad, specifically designated for parking aircraft loaded with transportation-configured explosives cargo, or those being loaded, unloaded, or awaiting loading.

Aircraft Shelters. Defined as being one of the following type structures.

- **USAFE TAB VEE**--24-foot radius semicircular arch, 48 feet wide by 100.8 feet long, front closure prow shaped, vertically hinged, recessed door. (First Generation Aircraft Shelter)**TAB VEE Modified**--24-foot radius semicircular arch, 48 feet wide by 100.8 feet long, front closure prow shaped, laterally opening, external flush door. (First Generation Aircraft Shelter)

- **Second Generation**--29.4-foot double-radius, pseudoelliptical arch, 82 feet wide by 124 feet long, vertical reinforced concrete panel, laterally opening, sliding, external flush door.

- **Third Generation**--27.4-foot double-radius, pseudoelliptical arch, 70.8 feet wide by 120 feet long, vertical reinforced concrete panel, laterally opening, sliding, external flush door. Personnel door at one side with barricade.

- **Korean TAB VEE**--24-foot radius semicircular arch, 48 feet wide by 100.8 feet long, open front. Exhaust port in rear wall protected only by a blast deflector barricade (otherwise identical to USAFE TAB VEE). When hardened doors are installed, consider these shelters as TAB VEE Modified.

- **Korean Flow-Through**--Constructed from third generation drawing but omits front door, back wall, and personnel door, 70.8 feet wide by 120 feet long, 27.4-foot double-radius, pseudoelliptical arch.

Ammunition. Any munition designed to be thrust from a gun barrel by expanding gases resulting from burning propellant. Rockets would not be included in this definition.

Barricade. An intervening barrier (natural or artificial) of such type, size, and construction as to limit the effects of low angle high velocity fragments.

Buddy System. At least two persons are present so that one may give assistance to the other if an emergency occurs.

Bulk Petroleum. Containerized fuel, usually in quantities of 5,000 gallons or more, and used to generate and sustain a unit's combat equipment and forces. Does not apply to fuel/gases used to support a single building or group of facilities.

Burning Areas. Locations sited for disposal of ammunition and explosives by burning.

Change House. A building provided with facilities for employees to change into and out of work clothes. Such buildings may be provided with sanitary facilities, drinking fountains, lockers, and eating facilities.

Classification Yard. A railroad yard used for receiving, dispatching, classifying, and switching cars that contain explosives.

Clear Zone. The area surrounding a potential explosion site which is determined by the required inhabited building separation. The inhabited building separation will be based on the sited, waivered, exempted, or actual explosives limits of the potential explosion site, whichever is greatest.

Combat Aircraft Parking Area. Any area specifically designated for parking aircraft loaded with combat-configured explosives, or those being loaded, unloaded, or awaiting loading. This includes aircraft hangars and alert shelters. Aircraft undergoing end-of runway arming or dearming are considered in the transportation mode and are exempt from Q-D.

Compatibility. Ammunition or explosives are considered compatible if they may be stored or transported together without significantly increasing either the probability of a mishap or, for a given quantity, the magnitude of the effects of such a mishap.

Concurrent Operations. Two or more explosives operations within a single facility or location.

Dangerously Unserviceable Munition. A munition or explosives that has a critical defect identified in the specific item technical order. This defect can result is a higher probability of inadvertent activation or functioning. These may include partially or fully armed or partially expended, broken, damaged, or leaking items, etc. (Not necessarily ADRs)

Deflagration. A rapid chemical reaction in which the output of heat is enough to enable the reaction to proceed and accelerate without input of heat from another source. The effect of a true deflagration under confinement is an explosion. Confinement of the reaction increases pressure, rate of reaction, and temperature and may cause transition into a detonation.

Demilitarization. To mutilate, disarm, or accomplish any other action required to prevent the further use of such equipment and materiel for its original intended military or lethal purpose.

Detonation. A violent chemical reaction within a chemical compound or mechanical mixture evolving heat and pressure. A detonation is a reaction or shock wave which proceeds through the reacted material toward the unreacted material at a supersonic velocity.

Deviation. Written authorization which allows a specific departure from a mandatory requirement of this regulation other than quantity-distance criteria.

Dividing Walls. These walls are one way of separating explosives into smaller groups to minimize the effects of an explosion and allow a reduction in Q-D separation. They may also be used to separate stocks of munitions to ensure compliance with compatibility requirements. Dividing walls provide little, if any, personnel protection. To receive credit as a dividing wall, reinforced concrete walls must either meet Substantial Dividing Wall criteria or be designed in accordance with the criteria in AFR 88-22, soon to be AFJMAN 32-1092 "Structures to Resist the Effects of Accidental Explosions." Dividing walls filled with earth or sand, used to compartmentalize magazines must be at least 5 feet thick with earth or sand packed between retaining walls. Sand-bag type dividing walls will be at least 5 feet thick, except where approved for other uses as in TO 11N-20-7.

Earth-Covered Magazine. The primary objective of an earth-covered magazine is to provide protection for its assets. To qualify for the default intermagazine distances in Table 3.3, a magazine, acting as an ES, must not collapse. Substantial deformation of the magazine may occur, however, the stored assets should be protected.

The earth-covered magazines are defined by three types based on the effects on the head wall and blast door hardness. All

earth-covered magazines have the same earth-cover requirements. Earth covered magazines in the following list (or magazines that have equivalent hardness to those in the list) may be sited as 7-Bar (100 psi) earth-covered magazines for NEW's up to 500,000 pounds, IAW Table 3.3:

- Reinforced concrete, arch-type, earth-covered magazines: Magazines whose construction is at least equivalent in strength to the requirements of the Office of Chief of Engineers, Department of the Army, drawings 652-686 through 652-693, December 27, 1941, as revised March 14, 1942, 33-15-06, Europe Dist. 33-15-16, 33-15-58 (atomic blast resistant), 33-15-61, and 33-15-74. For new construction use drawings 33-15-74.

- Magazines constructed according to Navy drawings 357428 through 357430, August 9,1944, and modified in accordance with NAVFAC drawing 626739, March 19, 1954; and NAVFAC drawings 627954 through 627957,

- Magazines constructed according to Navy drawings 357428 through 357430, August 9, 1944, and modified in accordance with NAVFAC drawing 626739, March 19, 1954; and NAVFAC drawings 627954 through 627957, 764597, 658384 through 658388, 724368, 751861, 764596, 793746, and 793747. For new construction use NAVFAC drawings 1404310 through 1404324, September 12, 1983.

- Box-type A magazines constructed according to NAVFAC drawings 1404000 through 1404007; box-type B magazines constructed according to NAVFAC drawings 1404018 through 1404025; box-type C magazines constructed according to NAVFAC drawings 1404430 through 1404444, September 20, 1985; box-type D magazines constructed according to NAVFAC drawings 1404465A through 1404478, September 20, 1985; box-type E magazines constructed according to NAVFAC drawings 1404523 through 1404537, June 9, 1987; and box-type F magazines constructed according to NAVFAC drawings 1404541 through 1404555, June 9, 1987.

- Earth-covered, corrugated steel, arch-type magazines at least equivalent in strength to those shown on Army OCE drawings numbered AW 33-15-63 (March 5, 1963); AW 33-15-64 (May 10, 1963); 33-15-65 (January 10, 1963); and NAVFAC drawings numbered 1059128-30, 1059132, 1069906, and 1355460-61. Magazines described in Air Force definitive drawings AD 33-15-67R2, AD 33-15-68R2, AD 33-15-69R2, an AD 33-15-70R1 (constructed IAW drawings AW 33-15-63 and AW 33-15-64) may be sited as 7 Bar magazines. OCE 33-15-73 (oval 1-ga steel arch) and NAVFAC drawings 1404026--14040-34 (oval 1-ga steel arch) are no longer approved for new construction. However, existing magazines are considered as 7 Bar magazines. For new construction of large magazines of this type use the earth-covered steel, semi-circular-arch magazine design shown on Army OCE drawing number 421-80-01, and for new construction of smaller magazines of this type use OCE drawing number 33-15-65.

- Earth-covered Circular Composite Arch Magazine described in NAVFAC drawing numbers 1404375 through 1404389, October 31, 1985, and the Earth-covered Oval Composite Arch Magazine described in NAVFAC drawing numbers 1404390 through 1404398, October 31, 1985.

- Air Force Munitions Storage Modules (MSM). Drawing number X8851911A

- ECMs in the following list (or ECMs that have equivalent hardness to those in the list) may be sited as 7-Bar ECMs for NEW's up to 350,000 pounds, IAW Table 3.3: NAVFAC box-type C, D, E, and F magazines.

- ECMs whose headwalls and blast doors have hardnesses of 3-Bars may be sited IAW the appropriate columns in Table 3.3. for NEW's up to 500,000 pounds.

- Any ECM of undefined or unknown strength or magazines constructed in accordance with NAVFAC drawings numbered 649602 through 649605, 793748, and 803060ECMs (or equivalent) may be sited as magazines of undefined harness for NEW's up to 500,000 pounds, IAW Table 3.3. Presently approved sitings for explosives weights not exceeding 250,000 pounds remain valid. Future sitings must reflect the appropriate criteria in Table 3.3.

★**Electric Power house.** An electric power generation facility that provides prime or stand-by auxiliary electrical power where no commercial power is available to meet operational requirements. Also called an electric power plant. A powerhouse can contain generators, fuel storage and supply, switch gear, and transformers (if required). Powerhouses supplying primary power to an installation or group of facilities are normally staffed. Power plants supplying only stand-by auxiliary power to individual facilities are usually unoccupied.

★**Electric Substations**. The point of supply for a base electrical distribution system or portion thereof. The main substation is usually the dividing point between government facilities and those of a utility company. A substation subdivides the power supply and contains protective and control devices for the incoming supply circuit, transformers (when required), voltage regulators, and indicating or recording instruments. A substation that has no transformers is sometimes called a switching station. (Note: Substations do not generate power.)

★**Electric Transformer Station.** An electrical facility which converts incoming power from the distribution system to lower voltage suitable for use directly by lights, motors, and other appliances.

Electroexplosive Device (EED). An explosive or pyrotechnic component that initiates an explosive, burning, electrical, or mechanical train and is activated by the application of electrical energy.

Electromagnetic Radiation (EMR). Radiation made up of oscillating electric and magnetic fields and propagated with the speed of light. Includes gamma radiation, x-rays, ultraviolet, visible and infrared radiation, and radar and radio waves.

Energetic Materials. Energetic materials are chemical compounds, or mixtures of chemical compounds, that are divided into three groups according to use: explosives , propellants, and pyrotechnics. Explosives and propellants that have been properly initiated evolve large volumes of hot gas in a short time. The difference between explosives and propellants is the rate at which the reaction proceeds. In explosives, a fast reaction produces a very high pressure shock in the surrounding medium. This shock is capable of shattering objects. In propellants, a slower reactions produces a lower pressure over a longer period of time. This lower sustained pressure is used to propel objects. Pyrotechnics evolve large amounts of heat but much less gas than propellants or explosives. Various external stimuli can cause release of the energy contained in energetic materials. Knowing the response of individual energetic materials to specific stimuli is important from the point of view of safety. Energetic material are sensitive to four external stimuli. These are: impact, shock, electrostatic, and thermal. Eliminating or controlling these stimuli are key to eliminating the unintentional initiation of energetic material. The focus of this manual is on these four areas. The hazards associated with energetic material are blast, fragments, mass fire, fire and toxicity.

★**Entry Control Point (ECP).** A location or facility used to control pedestrian or vehicular access to controlled or restricted areas. It is commonly found at the entrance to munitions storage areas and combat aircraft parking areas. If it is a permanent facility, it is sometimes also called a Gate House.

Exception. Is the inclusive term for any departure from the requirements of this manual.

Exemption. A relatively long-term departure from a mandatory requirement of the quantity-distance standards of this regulation.

Explosion Proof. Used in referring to electrical equipment; specifically, to equipment enclosed in a case that can withstand an internal burning or explosion of elements inside the case, and can prevent ignition by spark, flash, or explosion of any outside gas or vapor surrounding the enclosure.

Explosive. A substance or mixture of substances which under external influences, is capable of rapidly releasing energy in the form of gases and heat.

Explosives. All ammunition, munition fillers, demolition material, solid rocket motors, liquid propellants, cartridges, pyrotechnics, mines, bombs, grenades, warheads of all types, explosives elements of ejection and aircrew egress systems, air-launched missiles and those explosive components of missile systems and space systems, and assembled kits and devices containing explosive material. Explosives, explosives weight, net weight, and other like terms also refer to the fillers of an explosive item. Fillers may be explosive mixtures, propellants, pyrotechnics, and other toxic substances. This term does not include liquid fuels and oxidizers that are not used with missiles, rockets, and other such weapons or explosive items.

Explosives Area or Location. Any area or location specifically designated and set aside from other areas and used for manufacturing, testing, maintenance, storage, demilitarization, shipping and receiving, and other similar type explosives operations. Such areas may also be referred to as explosives parking or loading areas when armed or explosives-loaded aircraft are involved.

Explosives Content (of a PES). Determination based on the type, quantity, packaging and hazard class division of the explosives present. Expressed as a net explosives weight (NEW) in pounds.

Explosives Hazard. Any condition which may result in the occurrence of an explosives mishap or contribute to the severity of an explosives mishap should one occur.

Explosives-Loaded Aircraft. An aircraft is "explosives-loaded" when it carries munitions or explosives, internally or externally. The term does not include explosive components of aircrew escape systems or pyrotechnics installed in survival and rescue kits.

Explosives Operations Office. Any office adjacent to or within an explosives area in which operational administrative functions pertaining to explosives are performed. Also known as a field office.

Explosives Safety Distance (Quantity-Distance). An expression of the quantity versus distance principle involved, or the toxic hazard distance used in determining acceptable separations between given explosives sources and given exposures to the hazard. For the purposes of this regulation, the term "Quantity-Distance" or "Q-D" will be used (see "quantity-distance").

Explosives Storage Area. A designated area of explosives-containing facilities set aside for the exclusive storage or "warehousing" of the base explosives stocks. Facilities include igloos, magazines, operating buildings, modules, revetments, and outdoors storage sites.

Exposed Explosives. Explosives that are open to the atmosphere (such as unpackaged bulk explosives, or disassembled or open components) and that are susceptible to initiation directly by static or mechanical spark, or create (or accidentally create) explosive dust, or give off vapors, fumes, or gases in explosives concentrations. This also includes exidation and explosives exposed from damaged munitions such as gun powder or rocket motors.

Exposed Sites (ES). Any permanent structure, utility, POL, at risk from either blast or fire effects of a Potential Explosion Site (PES). An ES may or may not contain explosives. Previously known as ‘Target’ (in waiver requests) or acceptor (in explosives testing).

Facility. Any structure or location containing explosives, except aircraft and aircraft parking areas.

Field Office. See "explosives operations office."

Firebreaks. An area free of all readily combustible material, such as dry grass, leaves, brush or dead wood.

Fire-Resistive (Structural). The type of construction in which the structural members, including walls, partitions, columns, floor, and roof construction are of "noncombustible" materials that either do not burn or have specific fire resistance ratings in terms of hours.

Fire Retardant. Combustible materials or structures which have been treated or had surface coverings designed to retard ignition or fire spread.

Fire Wall. A wall of fire-resistive construction designed to prevent the spread of fire from one side to the other. (Also referred to as a fire division wall.)

Flightline Munitions Holding Area. A designated area where munitions and components are temporarily positioned awaiting transfer to aircraft. Examples are Ready Service Igloo, Ready Service Magazine, Ready Service Module.

Fragmentation. The breaking up of the ballistic case containing a chemical compound or mechanical mixture when an explosion takes place. Fragments may be complete items, subassemblies, or pieces thereof, as well as pieces from the building, aircraft, revetment, equipment, or other segments of the environment.

Fragment Distance. The limiting range, based on a specific density of hazardous fragments, expected from the type and quantity of explosives involved. Used in establishing certain quantity-distance (Q-D) criteria. A hazardous fragment is a fragment having an impact energy of 58 foot-pounds or greater. Hazardous fragment density is a density of hazardous fragments exceeding one per 600 square feet.

★**Gatehouse.** A permanent facility used to control pedestrian and vehicular access. Sometimes referred to as an Entry Control Point (ECP) when used at the entrance to controlled or restricted areas. Gatehouses used at base entrances are sometimes called Traffic Check Houses and cannot be considered related to explosives operations.

★**Guard Shelter.** A location or facility located at a single PES and used solely by the person guarding the PES. It is usually a temporary structure providing protection from the weather for a single guard. An example would be a temporary one-person structure used by someone guarding a nuclear weapons-loaded aircraft.

Hazard Classification. Identifies the hazardous characteristics of explosive items by their assignment to established hazard categories governing storage and transportation. These categories are: hazard class/division; storage compatibility group; Department of Transportation (DOT) class; and DOT marking.

Hazardous Locations for Electrical Equipment. Locations where flammable gases or vapors are, or may be, present in an explosive or ignitable mixture, or where combustible dust or easily ignitable particles or fibers may be present.

High Explosives Equivalent or TNT Equivalent. The amount of a standard explosives which, when detonated, will produce a blast effect comparable to the effect which results at the same distance from the detonation or explosion of a given amount of the material for which performance has been evaluated. It is usually expressed as a percentage of the total net weight of all reactive materials contained in the item or system. (For the purpose of this regulation, TNT is used for comparison.)

Holding Area Munitions (HAMS). Designated location on the flightline where built up munitions are temporarily placed pending delivery to combat aircraft or return to storage. HAMS must meet flightline munitions holding area Q-D criteria.

Holding Yard. A specified area designed or used to accommodate explosives-laden carriers before movements to a storage area or to their next destination. (Called "wharf yard" at seaports.)

Igloos (All Types). See "Earth-covered magazine."

Improvised Explosive Devices. Those devices placed or fabricated in an improvised manner incorporating destructive, lethal, noxious, pyrotechnic, incendiary, or toxic chemicals which are designed to destroy, harass, disfigure, or interrupt operation. They may incorporate military ordnance, but are normally made from commercial nonmilitary components.

Incapacitating Agent. An agent that produces temporary physiological or mental effects, or both, which will render individuals incapable of concerted effort in the performance of their assigned duties. (Excludes riot control agent

Incremental Distance. The distance based solely on overpressure protection (K factor) without regard to fragment protection. (Example: For 5000 pounds net explosives weight (NEW), the incremental K40/50 distance would be 685 feet instead of the 1,250 feet inhabited building (IB) distance separation required because of minimum fragment protection.)

Inert. As used here, to mean contains no explosives, active chemicals, or pyrotechnics, but is not necessarily noncombustible.

Inhabited Building. All buildings, locations, or structures, other than explosives locations, used in whole or in part as habitations or places of assembly for personnel, both within and outside military establishments not directly related to explosives operations. For example: schools, churches, residences (quarters), passenger terminals, shopping areas, factories, hospitals, theaters, dining halls, or hangars.

Inhabited Building Distance (IBD). The minimum allowable distance between an inhabited building and a potential explosion site.

Inspection Station. A designated location at which vehicles and railcars containing ammunition or explosives are inspected.

Interchange Yard. An area set aside for the exchange of railroad cars or vehicles between the common carrier and DoD activities.

Intermagazine Distance. The minimum distance allowed between two explosives locations. This distance is expected to prevent simultaneous detonation. This distance can not be waived.

Intraline Distance. The minimum distance allowed between any two operating locations and sites within an operating line or other designated exposures. This distance is expected to prevent propagation.

★Joint Use Airfield. An airfield serving both DoD and commercial aircraft. An airfield serving solely DoD, DOD chartered, or non-DoD aircraft on DoD authorized business is not joint use. (ATF, DOE, DEA, and other federal use aircraft are not considered commercial; therefore, joint-use standards do not apply.)

Launch Pads. The load-bearing base, apron, or platform upon which a rocket, missile, or space vehicle and its launcher rest during launching.

License. Formal permission to store explosives or munitions outside the sited explosives storage area.

Light Construction (Structure). Concrete masonry unit (block wall) construction without concrete fill or reinforcement; example - butler type buildings.

Liquid Propellants. Any combustible liquid fed to the combustion chamber of a rocket engine.

Loading Docks. Facilities or structures designed and installed for transferring material to or from vehicles, railcars, or cargo-type aircraft.

Magazine. Any building or structure, except an operating building, used for the storage of explosives. Magazines are of two general types: igloo (earth-covered) and aboveground (no earth covering). An aboveground magazine is any structure or facility, without sufficient earth covering, used for the storage of explosives. For igloo see “Earth-covered Magazine”.

Magazine Area. Same as "Explosives Storage Area."

Mass-Detonating Explosives. High explosives, black powder, certain propellants and pyrotechnics, and other similar explosives. They may be alone or in combination, or loaded into various types of ammunition or containers. Most of the entire quantity can explode instantaneously when a small portion is subjected to fire, to severe concussion or impact, to the impulse of an initiating agent, or to the effect of a considerable discharge of external energy. Such an explosion will generally cause severe structural damage to adjacent objects. The explosion may cause detonation of other items of ammunition and explosives, stored near enough to (and not adequately protected from) the initially exploding pile, so that the two or more quantities must be considered as one for quantity-distance (Q-D) purposes.

Modules. A barricaded area composed of one or more connected cells (revetments) with hard surface storage pads separated from one another by the prescribed barricade. A light metal building may be used in individual cells.

Munitions. See “Explosives”.

Munitions residue. Includes scrap powder, initiating or sensitive explosives, sweepings from explosives operations, and explosives contaminated rags.

Net Explosives Weight (NEW). The total quantity, expressed in pounds, of explosive material or high explosives equivalency in each item or round to be used when applying quantity-distance (Q-D) criteria or other standards.

Nuclear Weapon. A complete assembly (i.e., implosion type, gun type, or thermonuclear type) in its intended ultimate configuration which, upon completion of the prescribed arming, fuzing, and firing sequence, is capable of producing the intended nuclear reaction and release of energy. (JP1-02)

Operating Location. A building, facility, or site in which operations pertaining to the manufacturing, processing, handling, or assembling of ammunition and explosives are done. This includes preload facilities for aircraft multiple and triple ejector racks. Flightline explosives loading activities are defined as "explosives areas or locations" are not operating locations.

Outdoor Storage Sites. An open location selected within an explosives area or location for storage of explosive items or components.

Overpressure. The pressure, exceeding the ambient pressure, manifested in the shock wave of an explosion.

Passenger Railroad. Any railroad which carries passengers for hire (see "public traffic route").

Potential Explosion Site (PES). A location or facility which contains or is expected to contain explosives. Previously known as a source (in waiver requests) or donor (in explosives testing).

Propagating Explosion. The communication of an explosion (detonation or deflagration) from one potential explosion site to another by fire, fragment, or blast (shock wave), where the interval between explosions is long enough to limit the total overpressure at any given time to that which each explosion produces independently. This condition, where detonation occurs, would be evidenced by a distinct shock wave from each detonation, with a discernible pressure drop between each explosion; see "simultaneous detonation."

Public Highway. Any public street, road, or highway used by the general public for vehicular traffic. Streets and roads on military (DoD) installations are not usually considered public highways unless they are used for through traffic other than that related to the work of the installation (see "public traffic route").

Public Traffic Route. Any public highway, navigable stream, passenger railroad, or joint military-nonmilitary use taxiways.

Quantity-Distance (Q-D). The quantity of explosive material and distance separation relationships which provide defined types of protection. These relationships are based on the level of risk considered acceptable for each stipulated exposure and are tabulated in the Q-D tables. Separation distances are not absolute safe distances but are relative protective or safe distances.

Radially Aligned. Two missiles are radially aligned if the fragment pattern from either warhead intersect (90° angle)the other warhead.

Railroad. See Passenger Railroad

Ready Service Storage Facility. Holding area for ammunition and explosives limited to a maximum NEW of 22,000 lbs, located between hardened aircraft shelters.

Reinforced Concrete Walls. These concrete walls vary in thickness, but are at least 12 inches thick and constructed as specified in AFJMAN 32-1092 (AFM 88-22). Concrete compressive strength must be 2,500 psi or greater.

Residue. See Munitions Residue**.**

Responsible Commander. The commander having responsibility for the installation safety program.

Revetment. Barricades constructed to limit or direct a blast to reduce damages from low flying fragments and limit simultaneous detonation. Often used to form modules for open storage of munitions or protected aircraft parking.

Riot Control Agent. A chemical that produces temporary irritating or disabling effects when in contact with the eyes or when inhaled.

Safe Haven. Temporary storage granted to DOE classified shipment transporters at DoD facilities in order to assure the safety and security of nuclear material and/or nonnuclear classified material. It also includes parking for commercial vehicles containing HC/D 1.1 or 1.3 explosives. (AFI-32-4001)

Service Magazine. An auxiliary building servicing an operation used for the intermediate storage of explosives.

Simultaneous Detonation. The detonation of two or more items that are near each other, with one item detonating after the next, and with such short intervals between detonations, that the overall detonation appears to have emanated from a single item. Pressures produced by these independent detonations grow together (coalesce) within very short distances from their sources to cause peak overpressures greater than that of each independent source. Preventing simultaneous detonation is equivalent to providing intermagazine distance.

Static Test Stand. A location whereon liquid propellant engines or solid propellant motors are tested in place.

Substantial Dividing Walls. These walls are normally used between bays to prevent propagation of an explosion from one bay to the other. They provide little, if any, personnel protection. They are made of reinforced concrete at least 12 inches thick. The reinforcing consists of #4 bars (1/2 inch), or larger, on 12 inch centers each way on each wall face. The bars on the two wall faces are staggered with respect to each other. For example, vertical bars on one face start 12 inches from the end and on the other face they start 6 inches from the end. Similarly, horizontal bars on one face start 12 inches from the floor and on the other face they start 6 inches from the floor.

Suspect Vehicle and Railcar Site. A designated location for placing vehicles or railcars containing explosives that are suspected of being in a hazardous condition. These sites also are used for vehicles that may be in a condition that is hazardous to their contents.

Utilities. Utilities include: water, natural gas, steam, sewage, air and electrical and communications lines. The term "utility" does not apply to services provided to individual explosives facilities or a group of buildings when that service is not also secondarily provided to other parts of the base or community. See paragraph 3.13.1 for additional guidance on separations required for specific utilities.

Waiver. Written authority for a specific short term departure from a mandatory quantity-distance (Q-D) requirement of this manual. These should be corrected in less than five years.

Warehouse. These are facilities for storing material and supplies where personnel are infrequently present. The material may, or may not be associated with ammunition and explosives. See paragraph 3.18.

SOURCES FOR NON-AIR FORCE REFERENCE PUBLICATIONS

Publication	**Source** (Note 4)
A2.1. Tariff number BOE-6000-A, Hazardous Materials Regulations of the Department of Transportation Air, Rail Highway, Water and Military Explosives By Water, including Specifications for Shipping (see note 1)	Association of American Railroads 1920 L Street NW Washington DC 20036
A2.2. Bureau of Explosives Pamphlet No. 6 Illustrating Methods for Loading and Bracing Carload and Less-Than-Carload Shipments of Explosives and other Dangerous Articles (see note 1)	Same
A2.3. Bureau of Explosives Pamphlet No. 6C, Illustrating Methods for Loading and Bracing Carload and Less-Than-Carload Shipments of Loaded Projectiles, Loaded Bombs, etc. (see note 1)	Same
A2.4. Military Standard 444 (MIL-STD--444 and Definitions in the Ammunition Area (see note 2)	Naval Nomenclature Publications and Forms Center 5801 Tabor Avenue Philadelphia PA 19120
A2.5. Title 42, Code of Federal Regulations Part 72.25, Etiologic Agents (see note 1)	Superintendent of Documents US Government Printing Office Washington DC 20402
A2.6. Title 49, Code of Federal Regulations, Transportation (see note 1)	Same
A2.7. Underwriters Laboratories Bulletin 474, Dehumidifiers (see note 1)	Underwriters Laboratories 207 East Ohio St. Chicago IL 60611
A2.8. Official Air Transport Restricted Tariff No. 6D (ICAO No. 37/CAB No.82) (see note 1)	Airline Tariff Publishers Dulles International Airport PO Box 17232 Washington DC 20041
A2.9. American National Standards Institute Safety Codes (see note 1)	American National Stds Institute 1430 Broadway New York NY 10018
A2.10. American Society of Mechanical Engineers Standards (Eleven Sections) (see note 1)	American Society of Mechanical Engineers 345 East 47th St New York NY 10017
A2.11. DoD Flight Information Pamphlet (FLIP) Enroute, Instrument Flight Rules (IFR)--Visual Flight Rules (VFR) Supplements (see note 3)	Defense Mapping Agency AeroSpace Center St Louis AFS MO 63118
A2.12. Federal Acquisition Regulations (FAR) [see note 3]	(See AFIND 4)
A2.13. DoD Manual 4145.26, DoD Contractors Safety Manual for Ammunition, Explosives, and Related Dangerous Material (see note 3)	(See AFIND 4)

A2.14. Occupational Safety and Health Administration (OSHA) Standard 1910.109 (OSHA Safety and Health Standards/29 CFR 1910) [see note 3]	(See AFIND 17)
A2.15. Air Force Occupational Safety and Health (AFOSH) Standards [see note 3]	(See AFIND 17)
A2.16. National Fire Protection Association (NFPA) "National Fire Codes" (see note 1)	National Fire Protection Assn Batterymarch Park Quincy MA 02269

NOTES:

1. Available through base library.
2. Available through base master publications library.
3. Available through base publishing distribution office (PDO).
4. Some references are available through the internet.

HOW TO COMPLETE AF FORM 2047, EXPLOSIVES FACILITY LICENSE

A3.1. Item 1. Self-explanatory.

A3.2. Item 2. Self-explanatory.

A3.3. Item 3. The installation weapons safety manager will assign this number which will consist of the last two digits of the calendar year and a serial number, assigned in numerical sequence. (For example, the first license issued in 1990 would be numbered 90-1, the second would be 90-2.)

A3.4. Section I:

A3.4.1. Item 4. Insert building number as shown on TAB C-1 of the base comprehensive plan. For an unnumbered facility, insert narrative description such as outdoor storage (intransit).

A3.4.2. Item 5. Insert, for example, alert hangar, small arms range, egress shop, security and administrative building, rod and gun club, or life support shop, as applicable.

A3.4.3. Item 6. Identify by number assigned.

A3.4.4. Item 7. Enter if item 8 is entered.

A3.4.5. Item 8. Enter if item 7 is entered.

A3.4.6. Item 9. Enter a brief description of facility.

A3.5. Section II:

A3.5.1. Column A. Insert class/division (DOT Class may be used when facility is used exclusively for explosives in transportation cycle).

A3.5.2. Column B. Insert compatibility groups authorized by TO 11A-1-46 or AFJMAN 24-2-4, as applicable.

★A3.5.3. Column C. Insert stocklist nomenclature for each specific type item authorized in the location and national stock number (NSN) or federal supply class and Department of Defense Identification Code (DODIC).

A3.5.4. Column D. Insert number of items authorized (both serviceable and unserviceable).

A3.5.5. Column E. Insert total explosives weight based on number of items authorized (class/division 1.4 items are excluded).

A3.5.6. Column F. Insert fire symbol and chemical hazard symbol as required.

A3.6. Section III. Commander of organization requesting the license will be the certifying official.

A3.7. Section IV. The individual who is assigned installation weapons safety responsibilities completes and signs all copies.

A3.8. Remarks. The base fire chief will enter the specific type, quantity, and physical placement of fire extinguishers for the location. Also, when proper, conditions of approval, expiration date (if other than indefinite), reasons pertaining to disapproval, comments of
requesting organization, technical manual references, personnel limits, etc., should be included.

A3.9. Section V. Enter office symbols, dates, and names of coordinators.

HOW TO COMPLETE AF FORM 943, EXPLOSIVES SAFETY SITE PLAN/WAIVER/EXEMPTION

A4.1. Form Purpose: Use this form to describe the quantity-distance relationships when siting a new PES or non-explosive ES (at less than IBD), updating a previous siting action or submission of explosive waivers and exemptions. (See Figure A4.1, AF Form 943). If additional space is needed to explain any information required on this form, use the transmittal letter.

A.4.2. Section I--General Information.

A4.2.1. Action Number. Use a five part number as follows to identify the action (Only for new sitings/waivers/exemptions or updates).

A4.2.1.1. The requesting MAJCOM designation, followed by the tenant MAJCOM designation where needed to show the siting is for a tenant PES (host and tenant, such as: USAFE-AMC).

A4.2.1.2. The base or location where the action is located (for example, HILL AFB, RAMSTEIN AB, LOGAN IAP, etc.).

A4.2.1.3. Calendar year designation (97,98).

A4.2.1.4. An (S) identifier for the site plan request followed by a sequence number. Number each request sequentially for each calendar year. For example, the first site plan for the year would be S1. If more than one PES is included in the request, include an identifier for each. For example; S4, S5, or S6. Canceled requests will not affect the numbering of subsequent requests. For example, if site plan USAFE-RAMSTEIN 96-S10 were canceled, the next siting submitted for Hahn AB in 1996 would be 96-S11. If the siting involves Q-D violations, include the statement, "WITH VIOLATIONS" immediately following the site plan identification number. Detail the violations in Section II.

A4.2.2. Base/Location. Location of the siting action. For example Hill AFB,UT. If other than a military base, list civilian or commercial address.

A4.2.3. Date. Date site plan submitted.

A4.2.3. Referenced Action. Give current site plan number when a waiver or exemption is submitted.

A4.2.4. Requested Expiration Date. For waivers or exemptions, enter the requested expiration date.

A4.2.5. Approved Expiration Date. Enter the approved expiration date(s) of any waivers or exemptions assigned by the MAJCOM.

A4.3. Section II-- Site Data:

A4.3.1. Siting Information. Use this section to describe the facility /operation being sited and Q-D relationships.

A4.3.1.1. Column 1. Identify the facility or operation by its assigned number or other identifier (Bldg. 123 or F123).

A4.3.1.2. Column 2. First line: Describe, using the descriptions in Table 3.3 the type of facility or location being sited. For example: Operating location, 7 Bar Igloo. If the facility/operation being sited has a barricade that effects Q-D to the ES see instructions for Column 6.

Second line: Identify the primary operation normally expected at the facility/operation. Example: Shipping /Receiving, Maintenance/Inspection or Missile Storage, Bomb build-up, AFK, Trailer maintenance , SCPS-2, HAS (3rd Generation, Korean Flow Thru), etc. Show definitive drawing numbers when available.

★Third Line: Show the total number of people (M for Military or DoD Civilian, C for Non-DoD Civilian and FN for Foreign Nationals) normally employed at the location. Do not include visitors such as inspectors or quality control evaluators. For uninhabited facilities, use the number “0” or the word “none” to indicate there are no occupants. Include the MAJCOM and unit designation of the agency occupying the facility (USAFE-52FS).

A4.3.1.3. Column 3. Show the proposed NEW for the new or updated PES and the previously approved weights for existing sites being updated. The explosive authorization must always show the sited, waived, or exempted weights, whichever is greater. Leave blank for non-explosives sitings. For multiple room or bay facilities, show the NEW for each room or bay. For HC/D 1.1, (12)1.2, (18)1.2 and 1.3 show a number. For HC/D (04)1.2, (08)1.2 and 1.4 show "Capacity".

A4.3.1.4. Column 4. Show the class/division and category of the munitions (identifying a category of munition does not limit the facility to only that munition) expected at the sited PES. Example, 1.1 bombs or (12)1.2 projectiles. List separately for each room or bay as applicable.

A4.4. PES/ES Information. Use this section to describe the nature of facilities or operations within the IBD clear zone of the proposed siting action if a PES. If the action is a non explosive siting, then show all facilities within the evaluation zone. This zone is based on the type of non-explosive facility or utility e.g. Small Field Office or underground waterline. Determine the K factor to the non-explosive facility e.g. K-18 or K3 or minimum distance e.g. 100' to a related GOV parking area. If a K Factor is required then multiply this number by 79.37 (cube root of 500,000). This is the evaluation zone around the non-explosive siting.

A4.4.1. Columns 5 through 8. Same data elements as shown for columns 1 through 4. If violations are involved, assign each violation an identification number using the format as described in paragraph A4.2.1 in column 6. Annotate the identification number preceding each ES or PES in violation. Use the identifiers (W) for waivers and (E) for exemptions. Include superseded waiver or exemption identification numbers if applicable. If either the facility/operation being sited or the ES has a barricade that effects Q-D, indicate this after the facility description in Column 6. Example: Above Ground Magazine (Barricaded).

A4.4.2. Column 9. Show the actual distance from the facility listed in column 1 to facility listed in column 5.

A4.4.3. Column 10. Show the most restrictive(greatest) separation distance looking both ways required between columns 2 and 7.

★A4.4.4. Column 11. Enter K-factor or other standard (Table and Note) being used to obtain the distance in column 10. If there is a violation, place a "V" after the separation factor being violated.

A4.5. Section III - Exemption/Waiver Data. Complete this section if there are waivers or exemptions. See Attachment 5 for an example of an additional cover letter that the MAJCOM must prepare for site plans containing waivers and exemptions.

★A4.5.1. Item 1. Indicate the effect a maximum credible event at the PES would have on the unit mission, or other supported agencies. Describe the impact if the requested action is not approved. Carefully consider fragment and blast damage radii. Indicate the effect an explosion or fire (maximum credible event) at the PES would have on the unit mission, or other supported agencies. Also describe the effect if the requested action is not approved. Use Table 4.2 to estimate damage. The following are examples of expected loss: aircraft, moderate damage; 10 percent of aircraft maintenance facilities; 100 percent of POL facilities; and time periods related to recovery. Examples would be 100 percent for two days, 20 percent loss for an additional five days. Best estimates are acceptable.

A4.5.2. Item 2. Describe any corrective actions, compensatory precautions, and controls to achieve safety during operations if the request is approved. State whether corrective action can or cannot be done locally with available funds or other resources. If there is no planned construction or other corrective actions, explain why. Show planned or programmed (funded and unfunded) actions to eliminate violations. Such action might include recommendations to higher headquarters, assigning priorities, funding revisions to standard facilities, etc. If there are other local projects underway that involve funding, show the following: Construction priority assigned, Military Construction Program (MCP) item number and fiscal year for construction. Include any operational controls necessary.

A4.5.3. Item 3. Give the reason for the request.

A4.6. Section IV. For waivers and exemptions, or if compensatory measures are used to avoid a violation. Modify the signature blocks or add an additional signature page to meet local needs for routing or more signature blocks. The installation commander's signature shows that the request is needed for the mission. The approving authority certifies that the risks are acceptable for strategic or compelling reasons.

Figure A4.1. AF Form 943. *(NOTE: Document is shown representatively to illustrate use.)*

EXPLOSIVES SAFETY SITE PLAN/WAIVER/EXEMPTION

SECTION I -- GENERAL INFORMATION

ACTION NUMBER	BASE/LOCATION	DATE
AFMC-ACC-Hill AFB-97-S1 WITH VIOLATION	Hill AFB, Utah	

REFERENCED ACTION NUMBER	REQUESTED EXPIRATION DATE	APPROVED EXPIRATION DATE
	July 2001	

SECTION II -- SITE DATA

SITE INFORMATION				PES/ES INFORMATION						
FAC NO.	FACILITY/OPERATION DESCRIPTION Owning Unit and No. Of People	SITED N.E.W.	HC/D	FAC NO.	FACILITY/OPERATION DESCRIPTION Owning Unit and No. Of People *Waiver/Exemption Number*	SITED N.E.W.	HC/D	DIST ACT	DIST REQ	SEP FACTOR *Violation*
1	2	3	4	5	6	7	8	9	10	11
999	Operating Location Maintenance & Inspection ACC -388FW - 10 M	60,000 Capacity Capacity 150,000	1.1 (04)1.2 (08)1.2 1.3	930	Storage Mag- AG - Barricaded Bomb component storage ACC-388 FW	1,000 Capacity 70,000	1.1 (04)1.2 1.3	235’	234’ 200’ 225’	K6 (IM) 200 Min Tbl 3.3 (58)
				931	Storage (Inert) ACC-388 FW	N/A	N/A	100’	50’	Table 3.11
				938	Operating Location 20MM ammunition processing ACC-388 FW 6M	Capacity	(04)1.2	750’	705’	K18 (IL)
				1250	AFMC-ACC-Hill AFB-97-W1 Inhabited Building Military Personnel Flight(MPF) ACC-388 FW 35M 10C	N/A	N/A	1485’	1566’	K40(IB) V

AF FORM 943, OCT 96 PREVIOUS EDITIONS ARE OBSOLETE PAGE OF PAGES

FOR OFFICIAL USE ONLY

Section III - EXEMPTION/WAIVER DATA

1. IMPACT ON MISSION IF MISHAP OCCURS OR SITE PLAN IS NOT APPROVED

Facility 1250 would receive minimal damage from blast effects approximating 5% of the replacement cost. Moderate fragment damage is expected, depending largely upon the munitions involved and its fragmentation characteristic. Personnel in the open are not expected to receive serious injuries; however some injury is expected due to fragments. Personnel in the facility are provided a high degree of protection from serious injury or death. Injuries are expected due to secondary fragments from glass and building debris. Impact on mission capability would be minimal.

2. COMPENSATORY ACTIONS TAKEN ((Unusual controls, precautions, etc.) AND PROGRAMMING CONSTRUCTION ACTIONS TAKEN TO CORRECT VIOLATIONS, RECOMMENDED ACTION FOR HIGHER HEADQUARTERS

Munitions activities will be limited to nightly operations to the maximum extent possible. A new MPF facility is programmed for FY 2001, (project #01-97-007). The new facility's location is outside of any explosives clear zone. To provide personnel the greatest degree of safety munitions operations will be scheduled, as much as possible, limiting munitions hazards.

3. JUSTIFICATION

Mission requirements of the 388FW predicate continuous munitions support. The munitions maintenance and inspection facility is the only operating location capable of providing munitions support for the 388FW tasking.

SECTION IV - CERTIFICATION

COMMANDER CONCURRENCE		
TENANT UNIT (When Applicable)		
☐ Concur ☐ Non-Concur	PRINTED OR TYPED NAME	SIGNATURE
INSTALLATION/WING		
☐ Concur ☐ Non-Concur	PRINTED OR TYPED NAME	SIGNATURE
INTERMEDIATE COMMAND/STATE ADJUTANT GENERAL (ANG only)		
☐ Concur ☐ Non-Concur	PRINTED OR TYPED NAME	SIGNATURE
MAJOR COMMAND		
☐ Concur ☐ Non-Concur	PRINTED OR TYPED NAME	SIGNATURE
AF SAFETY CENTER		
☐ Concur ☐ Non-Concur	PRINTED OR TYPED NAME	SIGNATURE

SAMPLE COVER LETTER FOR AIR FORCE QUANTITY-DISTANCE EXEMPTION REQUEST

(APPROPRIATE LETTERHEAD)

(DATE)

MEMORANDUM FOR HQ USAF/SE

FROM: MAJCOM/CC
1234 Main Street
Anybase AFB, NM 87117-5671

SUBJECT: Risk Assessment for Secretary of the Air Force or HQ MAJCOM Exemption or Waiver, My AFB, (State/Country) 96-E1 through E10

********** The following paragraphs are **mandatory** for all exemption/waiver submissions. *********
******* Submit individual documentation for each BEEM Cat I and 2 violation. *******

STANDARD(S) VIOLATED. List specific violation(s) to Q-D Standards

CAUSE. Explain, in detail, the strategic or compelling reason which drives the violation of standards.

ALTERNATIVE(S). List option(s) which could prevent the violation of standards. For each alternative, provide rationale which precludes implementation.

RISK ASSESSMENT.

State the strategic or compelling reason(s) for the exemption/waiver. If explosives safety standards were one of several factors in considering this project, discuss those factors which were judged to outweigh safety and drive this violation.

Compare the predicted impact of an accidental explosion in conjunction with this violation with additional effects which would be experienced if no violation existed. State this in terms of personnel injures/deaths, damage to facilities, and affect on mission capability. Assign BEEM categories to each violation.

CONTROL MEASURES.

Compensatory Measures. Fully discuss all measures implemented to mitigate the adverse effects of and decrease the probability of an accidental explosion. Provide the title and number of the specific plan, OI, etc. which directs compensatory measures.

Elimination. Fully discuss planned investment strategy and other actions to eliminate the violation. Include sources of funding.

I fully understand the significance of violating explosive quantity-distance standards and consider my position justified based on the above discussion.

MAJCOM Commander's Signature Block

COPIES OF SELECTED SECRETARY OF THE AIR FORCE EXEMPTIONS

1 Atch
Exemption Request/Submission

(Some offices and symbols have changed)

SEP 18 1986

FOR OFFICIAL USE ONLY

OFFICE OF THE SECRETARY

MEMORANDUM FOR AF/IG

SUBJECT: Exemption of Explosives Safety Quantity-Distance (Q-D) Criteria for USAF Explosives Locations in the Republic of Korea (ROK) - INFORMATION MEMORANDUM

The United States Air Force has a requirement to maintain sufficient supplies of ammunition and explosives within the ROK to support wartime and contingency operational plans. Wherever and whenever possible, these munitions are stored to comply with explosives Q-D requirements. However, due to the limited real estate available and encroachment of the Korean civilian population into the explosives clear zones, there are a large number of off-installation exposures. The Air Force must work closely with the ROK authorities and support their efforts, however, control of off-installation clear zones is a ROK responsibility.

As requested by CINCPACAF (*now PACAF/CC)* in his letter of 7 April 1986 to HQ Air Force Inspection and Safety Center (AFISC) *(now AFSC)*, I am granting a permanent Korean-wide exemption of off-base exposures associated with USAF controlled munitions. My decision is based on the fact that (a) the quantities of munitions being stored are required to support war-fighting capabilities, (b) no other suitable locations that meet Q-D requirements are available, and (c) the encroachment into off-installation clear zones is beyond the control of the USAF. This exemption applies for all violations within the off-base clear zones identified on the maps that accompany the PACAF exemption request (Attachment 1). Exemption is granted for construction of new facilities which are properly sited, provided the clear zones required do not exceed the currently exempted off-base clear zones. Any construction that exceeds the current off-base clear zones must be approved by HQ PACAF and submitted to this office for an amendment to this exemption.

In order to ensure the greatest degree of safety, the following conditions are imposed: (a) Operations will be conducted by qualified personnel following approved procedures; (b) the degree of hazard will be reduced by strict adherence to safety and maintenance standards and procedures; (c) annual inspections will be made to assure explosives limits defined by the identified clear zones have not been exceeded; (d) munitions will be stored to reduce the hazards to the minimum degree possible consistent with operational requirements; and (e) permanent copies of this memorandum and the base maps showing established clear zones will be maintained at AFSC, HQ PACAF and the individual bases affected.

I want to reemphasize that this exemption must in no way reduce the Air Force effort to resolve the violations that exist. In applying this exemption, PACAF will at all times ensure adherence to the obligation of the United States under Article III, paragraph 3 of the SOFA to have due regard for the public safety in Korea. PACAF will continue to ensure that the ROK is aware of the required clear zones and of the potential hazards that exist. PACAF must continue also to work with ROK authorities to identify and obtain additional real estate and to remove people from the hazard areas. As stated in the exemption request, the exemption will be reviewed every five years and a copy of this exemption translated into Korean will be provided to the ROK Ministry of National Defense.

< signed >
E.C. Aldridge, Jr.
Secretary of the Air Force

SECRETARY OF THE AIR FORCE

WASHINGTON, D.C.

MEMORANDUM FOR SAF/IG JUN 29 1989

SUBJECT: Exemption of Explosives Safety Quantity-Distance (Q-D) Criteria for MAGNUM Locations in the Republic of Korea (ROK) - INFORMATION MEMORANDUM

The United States Air Force has a continuing requirement to maintain adequate supplies of ammunition and explosives within the ROK to support wartime and contingency operational plans. Since capabilities are limited on USAF-controlled installations, the US obtained additional storage capabilities through a concept known as MAGNUM (Munitions Storage Activities Gained by Negotiations of USAF/ROKAF Memorandum). MAGNUMs are a concept unique to Korea, where USAF-titled munitions are stored at facilities which are owned, operated, and protected by the ROKAF. Accordingly, the USAF has very little control over the storage of munitions within these areas and no authority to enforce the maintenance of Q-D clear zones. As a result of encroachment by the Korean civilians into the explosive clear zones, there are large numbers of exposures around the MAGNUMs.

As requested by CINCPACAF (*now PACAF/CC)* in his letter of 7 July 1986, to HQ Air Force Inspection and Safety Center (AFISC) *(now AFSC)*, I am granting a permanent exemption from US DOD Q-D standards for off-installation and ROK exposures created by storage of USAF munitions at MAGNUM locations. My decision is based on (1) operational requirements that preclude significant reduction of storage capabilities without significantly impacting war-fighting capabilities, (2) the absence of other suitable locations that meet Q-D requirements, and (3) the clear zone encroachment by Korean civilians that is beyond the control of the USAF. This exemption applies for all off-installation and ROK violations created by the originally sited net explosives weight (NEW) of storage structures located at the Osan, Kunsan, Suwon, Kwang Ju, Sachon, Taegu, and Cheong Ju MAGNUMs. Exemption is also granted for construction of new facilities at these sites, provided there are no intermagazine violations, no new exposures to US personnel and the clear zones required do not exceed the current off-installation clear zones. Any construction that exceeds the current off-installation clear zones must be approved by PACAF and submitted to this office for amendment to this exemption.

In order to ensure the greatest degree of safety, the following requirements are imposed: (1) intermagazine violations are not allowed; this will prevent simultaneous detonation, thus keeping clear zones to a minimum and assuring survival of munitions in the event of an accident; (2) within the inherent constraints of MAGNUM operations, USAF personnel will monitor ROKAF activities to ensure safety and maintenance standards and procedures are followed; (3) authorized NEW will be maintained and monitored by HQ PACAF safety and munitions personnel; and (4) permanent copies of this memorandum will be maintained at AFSC, HQ PACAF, and the host USAF installation providing support for the individual MAGNUM site.

This exemption must in no way reduce the USAF effort to resolve the violations that exist. In applying this exemption, PACAF will at all times ensure adherence to the obligation of the United States under Article III, paragraph 3, of the SOFA to have due regard for the public safety in the ROK. PACAF will continue to ensure that the ROK is aware of the required clear zones and of the potential hazards created by storage of explosives too close to civilian populations. PACAF must continue also to work with ROK authorities to correct these exposures wherever possible through such actions as obtaining additional real estate and removing people from hazard areas. This exemption will be reviewed every 5 years and a copy, translated into Korean, will be provided to the ROK Ministry of National Defense.

< SIGNED >

Donald B. Rice

Secretary of the Air Force

1 Attachment

Exemption Request

MEMORANDUM FOR: HQ PACAF/CV 29 MAR 1995

FROM: HQ USAF/SE
9700 G Ave SE, Suite 240
Kirtland AFB, NM 87117-5670

SUBJECT: Implementation Policy for SECAF Exemption for Korean MAGNUMs

I understand that confusion may exist over the intent of subject exemption. I have looked carefully at the entire package submitted to the SECAF to try to ascertain his mind-set. Two points were clear; 1) both the PACAF/CC and the SECAF noted that we have absolutely no control over off-base, and very little control over on-base, exposures; and 2) at the time of the request, there were already approved exemptions for on-base exposures at the MAGNUMs. Based on the above, the following guidance is provided:

a. All exposures to ROK facilities, both on- and off- site, are exempted. This recognizes the very real fact that we have absolutely no control over what they do on, or off, their bases.

b. All new construction or change in use of facilities requires the submission of a site plan to ensure no intermagazine violations or exposure of US personnel and that the clear zone does not extend off-base beyond the originally sited clear zone.

c. Encroachment of US personnel/facilities is not permitted, either inside or outside of the MAGNUMs.

The exemption clearly stipulates that clear zone arcs cannot exceed those that existed at the time the exemption was signed or the exemption must be modified. Although this exemption preserves our storage capability, it does not relieve the USAF from diligently working with the ROKAF to remediate existing and prevent future violations. The last paragraph of the exemption is clear on this point.

< Signed >
ORIN L. GODSEY, Brig Gen, USAF
Commander

SECRETARY OF THE AIR FORCE
WASHINGTON

Jul 1 1994

MEMORANDUM FOR DEPUTY UNDER SECRETARY (ENVIRONMENTAL SECURITY) OFFICE OF THE UNDER SECRETARY OF DEFENSE (ACQUISITION)

SUBJECT: Explosives Quantity-Distance (Q-D) Exemption for Siting Ports and Railheads used by US Air Forces Overseas

Pursuant to the requirements of DoD Directive 6055.9, Chapter 1, Paragraph C, please advise the DOD Explosives Safety Board (DDESB) that this memorandum exempts the US Air Force from the siting and Q-D requirements of DoD 6055.9-STD and AFMAN 91-201 for overseas ports and railheads used for the transshipments of munitions and explosives. This exemption is necessary to satisfy operational requirements.

We must continue to conduct operations abroad which require munitions at host nation ports and railheads as they are the only shipping points available. In all cases, the host nation directs which of their ports and railheads will be used for each shipment. Since we must comply with host nation regulations and restrictions, US site planning efforts are not always enforceable. In order to provide the safest possible conditions, we will continue to ship the minimum amount of munitions necessary to meet operational requirements. Under this exemption, MAJCOM Commanders must ensure the following procedures are used:

a. Operations conducted at host nation locations which have or use existing explosives safety criteria will be conducted in accordance with that criteria. MAJCOM's will forward host nation documentation [such as net explosive weight (NEW) limits, requirements, maps (if possible), and pertinent operational restrictions] to HQ AFSC/SE for review and forwarding to the DDESB for each port or railhead used. This exemption will provide acceptance of Q-D violations of US criteria which may exist at these locations.

b. Operations conducted at host nation locations which do not have or use explosives safety criteria will be conducted in accordance with DoD 6055.9-STD and Air Force regulations, where feasible. At those locations where US criteria cannot be met, a risk assessment will be prepared and forwarded to the MAJCOM commander for approval. US contracted commercial carriers will comply with appropriate NEW limits/restrictions established. This exemption will provide acceptance of the Q-D violations which may exist at these locations.

As a long term and more viable solution, I strongly recommend the DDESB provide instructions to the Services on how to evaluate and safely handle explosives shipments in foreign ports and railroads considering mission constraints and the potential hazards posed by the explosives. This exemption will remain in effect until no longer necessary and will be reviewed every five years for currency and applicability in accordance with AFMAN 91-201.

< Signed >

Sheila E. Widnall

DEPARTMENT OF DEFENSE EXPLOSIVES SAFETY BOARD
2461 EISENHOWER AVENUE
ALEXANDRIA, VIRGINIA 22331-0600

18 April 97

DDESB-KT

MEMORANDUM FOR DDESB MEMBERS AND ALTERNATES

SUBJECT: Munitions Suitable for Storage in ARMCO Revetments for Flight Line Operations

REFERENCES: (a) Minutes of 314 DDESB Board Meeting, Attachment F (4 Feb 1997)

(b) Letter, Michael Swisdak (NSWC) to Ray Sawyer (DDESB-KT), "Proposed ARMCO Revetment List," (17 Mar 1997)

Criteria were approved during the 314th DDESB Meeting Reference (a) for siting of munitions in ARMCO revetments during flight line, "load and unload operations." The DDESB Secretariat received an action item from the Board to develop and maintain a list of munitions suitable for storage in ARMCO revetments. Personnel from the Air Force and the Army prepared Reference (b) to support the assigned action. Reference (b) contains both a current listing of munitions suitable for use with an ARMCO revetment and a proposed methodology for adding other munitions to the list in the future.

At present, only thoses munitions common to the Air Force for flight line operations are listed. Operations in which the ARMCO Revetrnents would fmd applications for the other Services have not decided. However, if operations other than those on a flight line are approved, a methodology for screening new munitions will permit new munitions, common to all Services to be added in the future.

Attachment A contains the present listing of approved munitions while Attachment B contains the munitions screening procedure.

My POC for this action is Dr. Chester E. Canada (PH: 703-325-1369; FAX 703-325-6227; E-Mail canadac@ix.netcom.com).

<SIGNED>
W. Richard Wright
Colonel, USA
Chairman

MUNITIONS APPROVED FOR STORAGE IN ARMCO REVETMENTS DURING FLIGHT LINE OPERATIONS (16 April 1997)

HAZARD DIVISION	NOMENCLATURE	IDENTIFIER	REFERENCE
1.6	Any Item		1,2
1.4*	Any Item		1,2
1.3*	Any Item		1,2
1.2 (unit risk)	Any Item		1,2
1.2*	Any Item		1,2
1.1	Bomb, General Purpose	MK 81	3,4,5
	Bomb, General Purpose	MK 82	3,4,5
	Bomb, General Purpose	MK 83	3,4,5
	Bomb, General Purpose	MK 84	3,4,5
	Bomb, General Purpose	M 117	3,4,5
	Bomb, General Purpose	M 118	3,4,5
	Bomb, General Purpose	T56	3,4,5
	Bomb, General Purpose	BLU-31	3,4,5
	Bomb	BLU-82	6
	Bomb	13LU-109	6
	Guided Bomb	BLU-1 10	6
	Guided Bomb	BLU-1119	6
	Bomb	BLU-1 13	6
	Bomb, Fragmentation	AN-M4lAl	3,4,5
	Bomb, Semi Armor Piercing	AN-M59Al	3,4,5
	Dispenser and Bomb	CBU-20	10
	Dispenser and Bomb	CBU-38	10
	Dispenser and Bomb	CBU-59	10
	Dispenser and Bomb	CBU-70	10
	Dispenser and Bomb	CBU-87	10
	Dispenser and Bomb	CBU-89	10
	Guided Missile	AGM-45 (SHRIKE)	9
	Guided Missile	AGM-65 (MAVERICK)	6
	Guided Missile	AGM-84 (HARPOON)	6
	Guided Missile	AGM-86 (ALCM)	6
	Guided Missile	AGM-109 (TOMAHAWK)	6
	Guided Missile	AGM- 1 19 (PENGUIN)	6
	Guided Missile	AGM-122 (SIDEARM)	9
	Guided Missile	AGM-123 (SKIPPER)	6
	Guided Missile	GM-142 (HAVE NAP/POPEY)	6
	Guided Missile	AIM-7 (SPARROW)	7,8
	Guided Missile	AIM-9 (SIDEWINDER)	9
	Guided Missile	AIM-54 (PHOENIX)	9
	Torpedo	MK 48	7,8
	Torpedo	MK 48 ADCAP	7,8
	Torpedo	MK 48 ADCAP	7,8
	Torpedo	MK 46	7,8
	Projectile	M107 155 mm, HE	6
	Projectile	Ml 06, 8 inch. HE	6
1.1/1.2	Guided Missile	AGM-88	9
	Guided Missile	AIM-120	9
	Projectile	MI, 105 mm, HE	6

*Hazard Classification depends on packaging configuration.

REFERENCES

MUNITIONS APPROVED FOR STORAGE IN ARMCO REVETMENTS
DURING FLIGHT LINE OPERATIONS
(16 April 1997)

1. DoD 6055.9-STD, DoD Ammunition and Explosives Safety Standards, Oct 1992, latest version.

2. Minutes of 314th Board Meeting, Attachment F, 4 Feb 1997.

3. Peterson, F. H., "High Explosive Test (Big Papa)" AFWL-TR-67-132, May 1968.

4. McGuire, R. C., "Safe Parking Distances For Heavy Bomber Aircraft In Revetments (Project BIG MOMMA), "AFATL-TR-66-102,1966.

5. Jorgensen, J.M., "Aircraft Shelter Explosives Quantity-Distances Evaluation Concrete Sky Phase IXB, AFWL-TR-71-65, July 1971.

6. Analysis by M. Swisdak, based on definition of robust/non robust munitions and analogy with references 3,4,5.

7. Reeves, H., "Magazine Crush Tests Results for Thin-Skinned Ordnance Items" EMTC Report 0- FR-94-34, Energetic Materials Research and Testing Center, New Mexico Tech, Socorro, New Mexico.

8. Hager, K., Tancreto, J.E., and Swisdak, M., "Analysis of ARMCO Revetments to Prevent Sympathetic Detonation of Thin Case Munitions" NFESC TR-2059-SHR, May 1996.

9. Tancreto, J.E., Swisdak, M., and Malvar, J., "High Performance Magazine Acceptor Threshold Criteria," Minutes of the 26th DoD Explosives Safety Seminar, 16-18 Aug 1994.

10. Analysis by M. Swisdak and analogy with CBU-7, CBU-12, CBU-14, CBU-22, CBU-24, CBU -46, CBU-49, CBU-52, and CBU-58.

11. Definition of Robust Munitions from DoD 6055.9-STD: These are munitions having a ratio of the explosive weight to the empty case weight less than 1.00 and a nominal wall thickness of 0.4 inches. Examples of robust ammunition include MK 80 series bombs M107 projectiles, Tomahawk and Harpoon penetration warheads and 20, 25, and 30 mm cartridges. Examples of non-robust ammunition include CBUs, torpedo warheads, underwater mines and TOW, HELLFIRE, Sparrow, and Sidewinder Missiles. Unless otherwise noted, all air-to-air missile warheads are defined as non-robust.

PROCEDURE FOR PLACING AN ITEM ON THE ARMCO REVETMENT APPROVED MUNITIONS LIST FOR FLIGHT LINE OPERATIONS

The typical procedure for adding munitions to the ARMCO Revetment, Approved Munitions List for flight line operations is outlined below.

Submit an approval request with the following information to the Chairman, DDESB:

- Configuration drawings showing case and explosives materials dimensions

-General information about the explosives fill (materials; weights; sensitivities); the casing (materials; weights; nominal dimensions; etc.); and the all-up item (nomenclature, sensitivity test data, etc..

-Hazard classification test data for single package, stack, and external fire tests

-Information about other items that are pertinent to the item in question

Addition of an item to the Approved List is warranted if either of the following is true:

-the item under consideration is considered equivalent to one already on the list; or

- analyses, conducted IAW Reference (1), indicate that the item will not promptly detonate; or

-experimental results, taken IAW Reference (2), indicate that the item will not promptly detonate

References:

1. Hager, K., Tancreto, J.E., and Swisdak, M., “Analysis of ARMCO Revetments to Prevent Sympathetic Detonation of Thin Case Munitions," N-FESC TR-2059-SHR (May 1996)
2. Tancreto, J., Swisdak, M., and Malvar, J., "High Performance Magazine Acceptor Threshold Criteria," Minutes of the 26th DoD Explosives Safety Seminar (16-18 Aug 1994)

SUBJECT INDEX **Paragraph**

Air Transport Of Explosive 2.77
Aircraft Battle Damage Repair Sites 3.26
Aircraft Criteria ..... 3.35.
Aircraft, Grounding ..... 2.57.
Alarms, Fire ..... 2.20.
Angled Storage 3.37
Angled Storage Of Munitions In Has ..... 3.37.
Approval Levels For Specific Explosives Site Plans ..... 4.8.
Approved Equipment, Electrical ..... 4.40.
Austere Areas ..... 3.21.
Automatic Sprinkler Systems ..... 4.44.
Barricade Value ..... 3.12.9.
Barricades ..... 3.12.
Barricades Typical, Stack Relationship ..... Figure 3.2
Barricades, Artificial ..... 3.12.4.
Barricades, Inspection ..... 3.12.6.
Barricades, Magazines As 3.12.8
Barricades, Natural ..... 3.12.3.
Barricades, Siting 3.12.7
Base Defense Support Munitions For Dispersed Locations ..... 2.38.
Base Explosives Exemption Matrix (BEEM) ..... 5.7.
Battery-Powered Materials Handling Equipment ..... 2.72.
Blast Doors ..... 4.21.
Blast Effects ..... Table 4.2
Blast Pressure ..... 4.48.
Bracing Guidance ..... 2.76.9.
Buffered Storage Concept ..... 3.36.
Building Exits ..... 4.22.
Burns Planned 3.27
Car Seals, Changing ..... 2.76.13.
Cargo Aircraft Separations ..... 3.13.4.
Changing Car Seals ..... 2.76.13.
Chemical Hazard Symbols ..... 2.25.2.
Chemical Symbol, Dimensions ..... 2.25.4.
Chemical, Exceptions To Posting ..... 2.25.8.
Chemical, Obtaining ..... 2.25.5.
Chemical, Posting ..... 2.25.7.
Choosing And Installing Hardware ..... 4.33.
Classification Yards ..... 2.76.17.
Clear Zones ..... 4.15.
Collection Of Explosives Dusts ..... 4.42.
Compatibility Groups ..... 2.42.4.
Compatibility Of Ammunition And Explosive Items ..... 2.42.
Compatibility Of Explosives During Transportation ..... 2.64.
Compatibility, Exceptions ..... 2.44.
Compatibility, Mixed Storage ..... 2.43.
Compatibility, Storage ..... Table 2.4.
Concurrent Operations ..... 3.3.
Control Of Vegetation Along Railroad Right-of-Way ..... 2.76.7.
Control Tower ..... 2.37.1.
Controlled Burning, Separation Criteria For ..... 2.21.4.
Damaged Containers And Unpackaged Items ..... 2.30.
Damaged Or Fail To Function Explosives, Shipment Of ..... 2.66.
Dangerously Unserviceable Explosives Items ..... 2.31.
Defensive Missile Battery Separation 3.13.5
Deluge Systems ..... 4.45.

Determination Of Quantity-Distance ..... 3.11.
Determining Explosives Content Of A PES ..... 3.8.
Detonation Planned 3.27
Developing Written Procedures ..... 2.4.
Direct Combat Aircraft Generation Related Facilities ..... 3.13.3.
Directional Firing Munitions ..... 3.25.1.
Disposal Ranges 3.27
Disposal, Demonstrations, And EOD Operations Using Burning ..... 3.27.2.
Disposal, Demonstrations, And EOD Operations Using Detonation ..... 3.27.1.
Distance, Measuring ..... 3.10.
Dot Explosive Placards ..... 2.25.6.
Drains And Sumps ..... 4.32.
Egress Systems Maintenance Shops ..... 2.37.4.
Electrical Equipment ..... 4.40.
Electrical Hazards ..... 2.45.
Electrical Service Lines To Buildings ..... 2.48.
Electrical Storms, Procedures In Event Of ..... 2.56.
Electrical Testing Of Explosive Items ..... 2.55.
Electroexplosive Devices ..... 2.71.1.
Electromagnetic Radiation, Hazard To Electroexplosive Devices ..... 2.58.
Emergency Exits And Fire Escapes ..... 4.25.
Emergency Personnel, On-Scene Guidance ..... 2.25.
Emergency Withdrawal Distances ..... 2.24.
Emergency Withdrawal Distances ..... Table 2.1.
Emergency Withdrawal Distances For Essential Personnel ..... 2.24.1.
Emergency Withdrawal Distances For Nonessential Personnel ..... 2.24.2.
End Of Runway/ Dearm Crew Shelter ..... Table 3.3 (66)
EOD Disposal Range 3.28
EOD Tool Kits At Off-Range Locations ..... 3.28.3.
EOD Tool Kit Use 3.28.3
Exceptions To Compatibility ..... 2.44.
Exceptions To Posting Fire Symbols ..... 2.25.8.
Exceptions To Q-D 3.29.5
Exceptions To Fire Symbols ..... 2.25.8.
Exceptions To Siting A Potential Explosive Sites(PES) ..... 4.5.1.
Exceptions, General ..... 5.1.
Exit Doors ..... 4.23.
Explosive Dust Collection ..... 4.42.
Explosive Limits., Posting ..... 2.5.2.
Explosive Ordnance Disposal (EOD) Training 3.28
Explosive Safety Requirements - General Information ..... 2.1.
Explosives Fire Symbols ..... 2.25.1.
Explosives Loaded Aircraft ..... 3.25.
Explosives Movement Routes On Base ..... 2.68.
Explosives Stocks ..... 2.29.
Exposed Explosives Precautions ..... 2.71.6.
Exposed Site ..... 3.9.
Facilities Not Related 3.13.6
Facility Modifications Or Change In Use, Siting ..... 4.7.
Factors For Converting Gallons Of Propellant Into Pounds ..... Table 3.16
Federal Regulation ..... 2.60.
Fire Alarms ..... 2.20.
Fire Drills ..... 2.19.
Fire Extinguishers ..... 2.22.
Fire Prevention Requirements ..... 2.21.
Fire Protection Guidance ..... 2.18.
Fire Symbol Hazards And Actions ..... Table 2.2.
Fire Symbol, Dimensions ..... 2.25.4.

Fire Symbol, Exceptions To Posting ..... 2.25.8.
Fire Symbol, Obtaining ..... 2.25.5.
Fire Symbol, Posting ..... 2.25.7.
Fire Walls ..... 4.19.
Firebreaks ..... 2.21.3.
Firefighting Direction Symbol ..... 2.25.3.
Firefighting, Storage Of Water ..... 2.23.
Fireworks Displays ..... 2.9.
Fixed Ladders ..... 4.27.
Flammable Liquids For Cleaning ..... 2.21.5.
Flammable Material Storage ..... 2.21.6.
Flashlights And Lanterns ..... 2.50.
Flightline Munitions Holding Areas ..... 2.37.12.
Forward Firing Munitions ..... 3.25.1.
Fragment Distance ..... 4.49.
Fragments ..... 4.49.
Fusible Links ..... 2.27.8.
Gasoline Or Diesel-Powered Materials Handling Equipment ..... 2.73.
Government Owned Vehicle (GOV) Parking ..... 3.17.1.
Grounding Aircraft For Explosives Loading And Unloading 2.57
Grounding And Static Electricity ..... 2.51.
Hand Lights ..... 2.50.
Handling And Movement Precautions ..... 2.12.
Handling Equipment, Battery-Powered Materials ..... 2.72.
Handling Equipment, Gasoline Or Diesel-Powered Materials ..... 2.73.
Handloading ..... 2.37.9.
Hardened Aircraft Shelters ..... 3.20.
Hazard Classification Requirements ..... 2.63.
Hazard Symbol, Dimensions ..... 2.25.4.
Hazard Symbol, Exceptions To Posting ..... 2.25.8.
Hazard Symbol, Obtaining ..... 2.25.5.
Hazard Symbol, Posting ..... 2.25.7.
Health And Environment ..... 2.6.
Heat-Producing Devices ..... 2.21.1.
Housekeeping ..... 2.10.
Hunting ..... 2.13.
Incendiary Equipment And Document Destroyers ..... 2.37.6.
Incoming Shipments ..... 2.67.
Inhabited Building (IB)Distance ..... 3.2.1.
Inspection Of Incoming Loaded Railcars ..... 2.76.14.
Inspection Of Incoming Shipments ..... 2.74.15.
Inspection Of Outgoing Shipments ..... 2.74.16.
Inspections In Storage Structure Containing Explosives ..... 2.32.
Interior Finishes And Floors ..... 4.18.
Intermagazine Distance ..... 3.2.4.
Interservice Explosive Facilities 3.19
Intraline Distance ..... 3.2.3.
Inventory, Opening Containers For 2.32.8
Items Or Situations Not Requiring A License ..... 2.36.
Lanterns And Flashlights 2.50
Laundries ..... 4.37.
LGM-118 (Peacekeeper) 3.33
LGM-30 (Minuteman) 3.32
Licensed Explosives Storage Locations ..... 2.35.
Lighting, Permanent, For Magazines ..... 2.49.
Lightning Protection, Requirements And Exceptions ..... 2.54.
Liquefied Petroleum(LP)And Compressed Natural Gas(CNG)Fuel vehicles ..... 2.71.7.
Liquid Propellants ..... 3.30.

Load Protection ..... 2.71.3.
Load Stability ..... 2.71.4.
Loading And Bracing Guidance ..... 2.76.9.
Loading Docks ..... 3.15.
Loading Railcars ..... 2.76.8.
Local Written Procedures ..... 2.3.
Locomotives ..... 2.76.1.
Magazine Storage Requirements ..... 2.28.
Maintenance And Repairs To Equipment And Buildings: ..... 4.46.
Maintenance Of Vehicles Carrying Explosives: ..... 2.74.20.
Manufacturing And Loading Plants, Water Flow ..... 4.43.
Marking Railcars With Blue Flags Or Signals ..... 2.76.6.
Measuring Distance ..... 3.10.
Measuring Distance, Liquid Propellants ..... 3.30.7.
Minuteman Handling Team (MHT) Facility ..... 2.37.11.
Missile Separation 3.34
Missiles Mixed On Trailer 3.34.8
Missiles, Tactical Separation ..... 3.34.
Mixed Compatibility ..... 2.43.
Mixed Trailer Loads, Missiles 3.34.10
Modular Storage Restrictions ..... 3.23.
Module Description And Siting Criteria In Austere Areas ..... 3.22.
Morale, Welfare, And Recreation (MWR) Activities ..... 2.37.10.
Motor Vehicle Transportation: ..... 2.74.
Movement Of Explosives Shipments By Air ..... 2.77.
Movement Of Railcars Containing Explosives ..... 2.76.3.
Movement Routes For Explosives, Onbase ..... 2.68.
Munitions In Austere Areas ..... 3.21.
Munitions Maintenance Related Facilities ..... 3.13.2.
On-Scene Guidance To Emergency Personnel ..... 2.25.
Open Storage Sites In Austere Areas 3.24
Opening Containers For Inventory ..... 2.32.8.
Opening Containers For Removal Of Items In Storage ..... 2.32.7.
Operating Inside Storage Spaces Containing Explosives ..... 2.32.
Operating Instructions (OIs) 2.3
Operating Limits, Posting ..... 2.5.3.
Operating Support Equipment ..... 2.21.7.
Outdoor Storage Sites ..... 2.28.4.
Packing ..... 2.65.
Paint And Other Flammable Material ..... 2.21.6.
Passageways ..... 4.29.
Personnel Limits, Posting ..... 2.5.3.
Personnel Limits ..... 2.5.
Personnel Qualifications ..... 2.2.
Petroleum, Oil, And Lubricants Facilities ..... 3.29.
Piggyback Explosives Loading And Unloading Sites 2.76.18
Placarding Of Railcars ..... 2.76.10.
Placarding Vehicles ..... 2.71.2.
Planned Detonation Or Burns 3.27
Planned Detonation ..... 3.27.
Planning For Contingencies ..... 1.4.
Platforms, Runways, And Railings ..... 4.28.
Posting Explosives Limits ..... 2.5.1.
Posting Operating Limits ..... 2.5.2.
Posting Personnel Limits ..... 2.5.3.
Posting Symbols ..... 2.25.7.
Powerhouse Equipment ..... 4.35.
Privately Owned Vehicles (POV) Parking ..... 3.17.2.

Processing Waivers And Exemptions ..... 5.6.
Proficiency Ranges ..... 3.28.1.
Protective Clothing And Equipment ..... Table 2.3.
Public Traffic Route Distance ..... 3.2.2.
Quantity Distance, Types Of Separations ..... 3.2.
Quantity-Distance ..... 3.1.
Quantity-Distance, Determining Separation ..... 3.11.
Quantity-Distance, Measuring Distance ..... 3.10.
Rail Holding Yards ..... 2.76.16.
Rail Interchange Yard ..... 2.76.15.
Railcar Marking With Blue Flags Or Signals ..... 2.76.6.
Railcar Requirements ..... 2.76.11.
Railcars Containing Explosives, Movement Of ..... 2.76.3.
Railcars Or Vehicles Spotted At Operating Buildings ..... 3.16.
Railcars, Loading ..... 2.76.8.
Railcars, Placarding Of ..... 2.76.10.
Railcars, Piggyback, Loading And Unloading Site ..... 2.76.18.
Railcars, Sealing Of ..... 2.76.12.
Railcars, Spotting At Operating Building ..... 2.76.4.
Railroad Right-of-Way, Control Of Vegetation Along ..... 2.76.7.
Railroad Transportation ..... 2.76.
Real Property Contaminated With Ammunition And Explosives ..... 6.1.
Refrigeration ..... 4.36.
Reinforced Concrete Walls ..... 4.20.
Related (Non) Facilities 3.13.6
Related Facilities ..... 3.13.
Repairing Containers ..... 2.33.
Repairing Explosives Facilities ..... 2.34.
Requirements For Storage Locations ..... 2.27.
Retail Stores ..... 2.37.8.
Risk Assessment ..... 4.47.
Risk Assessment ..... 1.5.
Risk Assessment Of Training And Exercise Plans 2.16
Roads, Drainage ..... 2.27.4.
Roads, Walks, And Gates ..... 4.30.
Rocket Storage Checkout And Assembly Building ..... 3.14.
Rod And Gun Clubs ..... 2.37.7.
Safety Certification Of Munitions Systems ..... 2.8.
Safety Chutes ..... 4.24.
Safety Chains ..... 2.71.8.
Safety Requirements For Specific Facilities And Explosives 2.27
Separation Criteria For Controlled Burning ..... 2.21.4.
Separation Requirements For Licensed Explosives Storage Locations ..... 2.35.3.
Shipment Of Explosives, Damaged Or Failed To Function 2.66
Shipments, Air ..... 2.77.
Shipments, Inspection Of Incoming ..... 2.74.15.
Shipments, Inspection Of Outgoing ..... 2.74.16.
Shipments, Incoming ..... 2.67.
Shipments, Railroad ..... 2.76.
Simulators And Smoke Producing Munitions ..... 2.15.
Site Planning Format Options ..... 4.13.
Site Plans Involving Violations Of Explosives Safety Standards ..... 4.9.
Site Plan Submission Process ..... 4.3.
Site Planning, Computerized ..... 4.12.
Site Plans, Basic Guidance ..... 4.2.
Siting COBs Or Other Bases Used Only For Contingencies Or Exercises ..... 4.14.
Siting For Contingencies Or Exercises ..... 4.14.
Siting Non Explosive Exposed Sites (Es) ..... 4.6.

Siting Non Explosive Exposed Sites (Es), Exceptions ..... 4.6.
Siting Potential Explosive Sites (PES) ..... 4.5.
Siting Potential Explosive Sites (PES), Exceptions ..... 4.5.1.
Siting, Computerized ..... 4.12.
Siting, Tiered ..... 4.10.
Smoke Grenades, Use In Training/Exercises ..... 2.15.
Smoking ..... 2.11.
Specific Items And Situations, Minimum Distances ..... Table 3.22.
Specific Situations Requiring Explosives Site Plan Submission ..... 4.4.
Sprinkler Systems, Automatic ..... 4.44.
Stacking Combustible Material ..... 2.21.8.
Stairways ..... 4.26.
Static Electricity ..... 2.51.
Static Grounding ..... 2.52.
Static Or Public Display ..... 2.7.
Steam For Processing And Heating ..... 4.38.
Storage Magazines ..... 2.28.
Storage ..... 2.26.
Storing Water For Firefighting ..... 2.23.
Substantial Dividing Walls ..... 2.41.
Survival/Rescue Equipment ..... 2.37.2.
Tactical Missile Separations 3.34
Temporary Storage ..... 2.63.2.
Testing, Disassembly And Modification Of Explosives ..... 2.79.
Tier Siting And Risk Management ..... 4.10.
Track Layout ..... 2.76.2.
Trailers Or Flatcars, Loading Or Unloading Site ..... 2.76.18.
Training Ammunition Within Munitions Storage Area 2.14
Training And Exercise Plans 2.16
Transportation Guidance ..... 2.71.
Transportation Of Explosives By Water ..... 2.78.
Transportation, Railroad ..... 2.76.
Transporting Dangerously Unserviceable Explosive Items For Disposal ..... 2.75.
Transporting Electroexplosive Device ..... 2.71.1.
Transporting Explosives ..... 2.71.
Tunnels 4.34
Unserviceable Explosives Items ..... 2.31.
Using EOD Tool Kits At Off-Range Locations ..... 3.28.3.
Vegetation Along Railroad Right-of-Way ..... 2.76.7.
Vegetation Control ..... 2.21.2.
Vegetation, Burning ..... 2.21.4.
Vehicle And Material Handling Equipment General Safety Requirements ..... 2.70.
Vehicle Chocks ..... 2.74.4.
Vehicle Inspection Requirement ..... 2.74.3.
Vehicle Operations Inside Structures ..... 2.71.10.
Vehicle Parking Areas ..... 3.17.
Vehicle Refueling ..... 2.71.5.
Ventilation ..... 4.39.
Waivers, Exemptions & Deviations - General Information ..... 5.1.
War Reserve Material (WRM) Vehicles Parking ..... 3.17.3.
Warehouses ..... 3.18.
Water Flow For Explosives Manufacturing Areas And Loading Plants ..... 4.43.
Windows And Skylights ..... 4.31.
Withdrawal Distances For Planned Detonations ..... 3.27.
Withdrawal Distances ..... Table 2.1.
Withdrawal Distances For Essential Personnel ..... 2.24.
Withdrawal Distances For Nonessential Personnel ..... 2.24.2.
Written Procedures ..... 2.3.

Table 3.3. Quantity Distance Criteria.

HAZARD CLASS/DIVISION **Class/Division 1.1 (35)**

	COLUMN		1	2	3	4	5	6	7	8	9	10
LINE	FROM: POTENTIAL EXPLOSION SITE (PES)		EARTH COVERED IGLOO (1)				ABOVE GROUND MAGAZINE	ABOVE GROUND MAGAZINE	BARRI-CADED MODULE	OPERATING LOCATION UNBARRI-	OPERATING LOCATION BARRI-	MISSILE BATTERY DEFENSIVE
	TO: EXPOSED SITE (ES)		SIDE (61)	REAR (61)	FRONT UNBARRI-CADED (39) (5)	FRONT BARRI-CADED (39) (5)	UNBARRI-CADED (2) (3) (5)	BARRI-CADED (2) (3) (5)	(38)	CADED (46) (5)	CADED (3) (5) (46)	
1	EARTH COVERED IGLOO (1) SIDE	7 Bar	K1.25 (14)	K1.25 (14)	K2.75 (14)	K2.75(14)	K4.5	K4.5	K4.5	K4.5	K4.5	K4.5
		3 Bar	K1.25 (14)	K1.25 (14)	K2.75 (14)	K2.75 (14)	K6	K6	K6	K6	K6	K4.5
		Undef	K1.25 (63)	K1.25 (63)	K4.5 (63)	K4.5 (63)	K6	K6	K6	K6	K6	K4.5
			K2 (64)	K2 (64)	K6 (64)	K6 (64)						
2	REAR	7 Bar	K1.25 (14)	K1.25 (14)	K2	K2	K4.5	K4.5	K4.5	K4.5	K4.5	K4.5
		3 Bar	K1.25 (14)	K1.25 (14)	K2	K2	K6	K6	K6	K6	K6	K4.5
		Undef	K1.25 (14)	K1.25 (14)	K2	K2	K6	K6	K6	K6	K6	K4.5
3	FRONT UNBARRI-CADED (5) (39)	7 Bar	K2.75 (14)	K2	K6	K6	K6	K6	K6	K6	K6	K6
		3 Bar	K4.5	K4.5	K9	K9	K9	K9	K6	K9	K9	K9
		Undef	K6	K6	K11	K11	K11	K11	K11	K11	K11	K11
4	FRONT BARRI-CADED (5)(39)	7 Bar	K2.75 (14)	K2	K6	K6	K6	K6	K6	K6	K6	K6
		3 Bar	K4.5	K4.5	K6	K6	K6	K6	K6	K6	K6	K6
		Undef	K6	K6	K6	K6	K6	K6	K6	K6	K6	K6
5	ABOVE GROUND MAGAZINE UNBARRICADED (2)		K6	K6	K11	K11	K11	K6	K11	K11	K6	K11
6	ABOVE GROUND MAGAZINE(2) (3) (5) BARRICADED		K6	K6	K6	K6	K6	K6	K6	K6	K6	K6
7	BARRICADED MODULE (38)		K1.25 (14)	K1.25 (14)	K6	K6	K6	K6	K1.1 (4)	K6	K6	K6
8	OPERATING LOCATION UNBARRICADED		K18 (6)	K18 (6)	K18	K18 (6)	K18	K18 (6)	K18 (6)	K18	K18 (6)	K18
9	OPERATING LOCATION (3) (5) BARRICADED		K18 (6)	K18 (6)	K18 (6)	K18 (6)	K18 (6)	K18 (6)	K18 (6)	K18 (6)	K18 (6)	K18
10	COMBAT AIRCRAFT PARKING AREA (65)		K30	K30	K30	K30	K30	K30	K30	K30	K30	K11 (7)(23) (68)
11	AIRCRAFT EXPLOSIVES (32) CARGO PARKING		K6 (68)	K6 (68)	K11 (7) (68)	K11 (7) (68)	K11 (7) (68)	K6 (7) (68)	K11 (68)	K11 (7) (68)	K6 (68)	K11 (7)(23) (68)
12	FLIGHTLINE MUNITIONS HOLDING AREA		K6	K6	K11 (7)	K11	K11 (7)	K6	K11	K11 (7)	K6	K11 (7)
13	HARDENED AIRCRAFT SHELTER (12) (37)		K5 (51)	K5 (51)	K8 (51)	K8 (51)	K8 (51)	K8 (51)	K8 (51)	K8 (51)	K8 (51)	K2.75 (50)
14	DEFENSIVE MISSILE BATTERY		K6	K6	K11	K11	K11	K6	K11	K11	K6	K11
15	AIRFIELD MILITARY USE	RUN-WAY	K18 (30)	K18 (30)	K30 750'MIN (30)	K30 750'MIN (30)	K30 750'MIN (30)	K30 750'MIN (30)	K30 750'MIN (30)	K30 750'MIN (30)	K30 750'MIN (30)	NONE REQUIRED

16	**ONLY (66)**	TAXI-WAY	K18 (30)	K18 (30)	K21/30 750'MIN (30)	K21/30 750'MIN (30)	K24/30 750'MIN (30)	K24/30 750'MIN (30)	K24/30 750'MIN (30)	K24/30 750'MIN (30)	K24/30 750'MIN (30)	NONE REQUIRED
17	**AIRFIELD, JOINT MILITARY/**	RUN-WAY	K35/50 1250'MIN (47) (52)	K25/50 1250'MIN (47) (52)	K35/50 1250'MIN (47) (52)	K35/50 1250'MIN (47) (52)	K40/50 1250'MIN (47)	K40/50 1250'MIN (47)	K40/50 1250'MIN (47)	K40/50 1250'MIN (47)	K40//50 1250'MIN (47)	K40/50 1250'MIN (47)
18	**NON MILITARY USE (66)**	TAXI-WAY	K21/30 750'MIN (48) (53)	K15/30 750'MIN (48) (53)	K21/30 750'MIN (48) (53)	K21/30 750'MIN (48) (53)	K24/30 750'MIN (48)	K24/30 750'MIN (48)	K24/30 750'MIN (48)	K24/30 750'MIN (48)	K24/30 750'MIN (48)	K24/30 750'MIN (48)
19	**NON-EXPLOSIVES LOADED AIRCRAFT**		K35/50 1250'MIN (42)(47)(52)	K25/50 1250'MIN (42)(47)(52)	K35/50 1250'MIN (42)(47)(52)	K35/50 1250'MIN (42)(47)(52)	K40/50 1250'MIN (42) (47)	K40/50 1250'MIN (42) (47)	K40/50 1250'MIN (42) (47)	K40/50 1250'MIN (42) (47)	K40/50 1250'MIN (42) (47)	K30 (43)
20	**PASSENGER LOAD/UNLOAD AREA (45)**		K21/30 750'MIN (48) (53)	K15/30 750'MIN (48) (53)	K21/30 750'MIN (48) (53)	K21/30 750'MIN (48) (53)	K24/30 750'MIN (48)	K24/30 750'MIN (48)	K24/30 750'MIN (48)	K24/30 750'MIN (48)	K24/30 750'MIN (48)	K30 (48)
21	**FACILITIES FOR COMBAT AIRCRAFT ALERT FORCES (49)**		K18	K18	K18	K18	K18	K18	K18	K18	K18	K18
22	**ABOVE GROUND UTILITIES, EXCEPT POWER LINES (6)(24)**		K21/30 750'MIN (48) (53)	K15/30 750'MIN (48) (53)	K21/30 750'MIN (48) (53)	K21/30 750'MIN (48) (53)	K24/30 750'MIN (48)	K24/30 750'MIN (48)	K24/30 750'MIN (48)	K24/30 750'MIN (25) (48)	K24/30 750'MIN (25) (48)	K24/30 750'MIN
23	**UNDERGROUND UTILITIES POL FACILITIES OVER 5,00 GALLON (24)(44)**		K3 80'MIN	K3 80'MIN	K3 80'MIN	K3 80'MIN	K3 80'MIN	K3 80'MIN	K3 80'MIN	K3 80'MIN	K3 80'MIN	K3 80'MIN
24	**ABOVE GROUND POL FACILITIES OVER 5,00 GALLONS (44)**		K35 1250'MIN (47) (54)	K35 1250'MIN (47) (54)	K35 1250'MIN (47) (54)	K35 1250'MIN (47) (54)	K40/50 1250'MIN (47)	K40/50 1250'MIN (47)	K40/50 1250'MIN (47)	K40/50 1250'MIN (47)	K40/50 1250'MIN (47)	K40/50 1250'MIN (47)
25	**PUBLIC TRAFFIC ROUTE (9)**		K21/30 750'MIN (48) (53)	K15/30 750'MIN (48) (53)	K21/30 750'MIN (48) (53)	K21/30 750'MIN (48) (53)	K24/30 750'MIN (48)	K24/30 750'MIN (48)	K24/30 750'MIN (48)	K24/30 750'MIN (48)	K24/30 750'MIN (48)	K24/30 750'MIN (48)
26	**RECREATION AREA/ FACILITY (34)**		K35/50 1250'MIN (47) (52)	K25/50 1250'MIN (52)	K35/50 1250'MIN (47) (52)	K35/50 1250'MIN (47) (52)	K40/50 1250'MIN (47)	K40/50 1250'MIN (47)	K40/50 1250'MIN (47)	K40/50 1250'MIN (47)	K40/50 1250'MIN (47)	K40/50 1250'MIN (47)
27	**RELATED FACILITY (36)**		K18 (6) (41)	K18 (6) (41)	K18 (6) (41)	K18 (6) (41)	K18 (6) (41)	K18 (6) (41)	K18 (6) (41)	K18 (6) (41)	K18 (6) (41)	K18 (6) (41)
28	**INHABITED BUILDING (60) (33)**		K35/50 1250'MIN (47) (52)	K25/50 1250'MIN (47) (52)	K35/50 1250'MIN (47) (52)	K35/50 1250'MIN (47) (52)	K40/50 1250'MIN (47)	K40/50 1250'MIN (47)	K40/50 1250'MIN (47)	K40/50 1250'MIN (47)	K40/50 1250'MIN (47)	K40/50 1250'MIN (47)
	COLUMN		**1**	**2**	**3**	**4**	**5**	**6**	**7**	**8**	**9**	**10**

Class/Division 1.2									**Class/ Div 1.3**	**Class/ Div 1.4**	
11	**12**	**13**	**14**	**15**	**16**	**17**	**18**	**19**	**20**	**21**	
COMBAT AIRCRAFT PARKING AREA (37)(67)	**AIRCRAFT EXPLOSIVE CARGO PARKING AREA (32)**	**FLIGHT-LINE MUNITIONS HOLDING AREA**	**HARDENED AIRCRAFT SHELTER (EXCEPT 3RD GENERATION (12)(13)(37)(70)**	**HARDENED AIRCRAFT SHELTER 3RD GENERATION (12)(13)(37)(70)**	**ALL TYPES OF POTENTIAL EXPLOSION SITE (10) (11) (57) (13)**				**ALL TYPES OF POTENTIAL EXPLOSION SITE (13)(55) (21)(31)**	**ALL TYPES OF POTENTIAL EXPLOSION SITE (13)(19) (20)**	**LINE**
					[04]	**[08]**	**[12]**	**[18]**			
K4.5	K4.5	K4.5	K4.5	K4.5	100'	100'	100'	100'		100'	**1**
K6	K6	K6	K6	K6	MIN	MIN	MIN	MIN	(58)	MIN	
K6	K6	K6	K6	K6	(26)	(26)	(26)	(26)		(26)	

K4.5 K6 K6	K4.5 K6 K6	K4.5 K6 K6	K4.5 K6 K6	K4.5 K6 K6	100’ MIN (26)	100’ MIN (26)	100’ MIN (26)	100’ MIN (26)	(58)	100’ MIN (26)	**2**
K6 K9 K11	K6 K9 K11	K6 K9 K11	K6 K9 K11	K6 K9 K11	200’ MIN (26)	300’ MIN (26)	300’ MIN (26)	300’ MIN (26)	(58)	100’ MIN (26)	**3**
K6 K6 K6	K6 K6 K6	K6 K6 K6	K6 K6 K6	K6 K6 K6	200’ MIN (26)	300’ MIN (26)	300’ MIN (26)	300’ MIN (26)	(58)	100’ MIN (26)	**4**
K11 (7)	K11 (7)	K11 (7)	K11 (8)	K11 (8)	200’ MIN (16)	300’ MIN (16)	300’ MIN (16)	300’ MIN (16)	(58)	100’ MIN (26)	**5**
K6	K6	K6	K6	K6	200’ MIN (16)	300’ MIN (16)	300’ MIN (16)	300’ MIN (16)	(58)	100’ MIN (26)	**6**
K6	K6	K6	K6	K6	200’ MIN (16)	300’ MIN (16)	300’ MIN (16)	300’ MIN (16)	(58)	100’ MIN (26)	**7**
K18	K18 (6)	K18 (6)	K18 (6)	IL at Note 62	200’ MIN	400’ MIN	600’ MIN	900’ MIN	(58)	100’ MIN (26)	**8**
K18	K18 (6)	K18 (6)	K18 (6)	IL at Note 62	200’ MIN	400’ MIN	600’ MIN	900’ MIN	(58)	100’ MIN (26)	**9**
K11 (7)(22)(23) (68)	K11 (7)(23)(68)	K11 (7)(23)(68)	K11 (8)(23)(68)	K11 (8) (23)(68)	240’ MIN (17)	480’ MIN (17)	720’ MIN (17)	1080’ MIN (17)	(59)	100’ MIN (26)	**10**
K11 (7) (68)	K11 (7) (68)	K11 (7) (68)	K11 (8) (68)	K11 (8) (68)	200’ MIN (18)	300’ MIN (18)	300’ MIN (18)	300’ MIN (18)	(58)(18)	100’ MIN (29) (18)(26)	**11**
K11 (7)	K11 (7)	K11 (7)	K11 (7)	USE TABLE 3.13	200’ MIN (15)	300’ MIN (15)	300’ MIN (15)	300’ MIN (15)	(58)(15)	100’ MIN (15)(26)	**12**
K2.75 (50)	K2.75 (50)	SEE PARA 3.20	SEE PARA 3.20	SEE PARA 3.20	240’ MIN (17)	480’ MIN (17)	720’ MIN (17)	1080’ MIN (17)	(58)(17)	100’ MIN (17)	**13**
K11 (7)	K11 (7)	K11 (7)	K11 (8)	K11 (8)	200’ MIN	300’ MIN	300’ MIN	300’ MIN	(58)	100’ MIN (26)	**14**
NONE REQUIRED (56)	NONE REQUIRED (56)	NONE REQUIRED (56)	NONE REQUIRED (56)	NONE REQUIRED (56)	240’ MIN (17)(30) (18)	480’ MIN (17)(30) (18)	720’ MIN (17)(30) (18)	1080’ MIN (17)(30) (18)	(17)(30) (59)	100’ MIN (17)	**15**
NONE REQUIRED (56)	NONE REQUIRED (56)	NONE REQUIRED (56)	NONE REQUIRED (56)	NONE REQUIRED (56)(12)	240’ MIN(27) (17)(30) (18)	480’ MIN(27) (17)(30) (18)	720’ MIN(27) (17)(30) (18)	1080’ MIN(27) (17)(30) (18)	(17)(30) (59)	100’ MIN (17)	**16**
K40/50 1250’MIN (47)	K40/50 1250’MIN (47)	K40/50 1250’MIN (47)	K40 REAR K62 SIDE K50 FRONT (40)	IB at Note 62	400’ MIN	800’ MIN	1200’ MIN	1800’ MIN	(59)	100’ MIN	**17**
K24/30 750’MIN (27)(48)	K24/30 750’MIN (27)(48)	K24/30 750’MIN (27)(48)	K24/30 REAR K37 SIDE K30 FRT(27) (40)	PTR at Note 62 (27)	240’ MIN (27)	480’ MIN (27)	720’ MIN (27)	1080’ MIN (27)	(27) (59)	100’ MIN (27)	**18**
K40/50 1250’MIN (43)(47)	K40/50 1250’MIN (43)(47)	K40/50 1250’MIN (43)(47)	K40 REAR K62 SIDE K50 FRONT (40)	IB at Note 62	400’ MIN (43)	800’ MIN (43)	1200’ MIN (43)	1800’ MIN (43)	(43) (59)	100’ MIN (43)	**19**
K24/30 750’MIN (48)	K24/30 750’MIN (48)	K24/30 750’MIN (48)	K24/30 REAR K37 SIDE K30 FRT (40)	PTR at Note 62	240’ MIN	480’ MIN	720’ MIN	1080’ MIN	(59)	100’ MIN	**20**
K18 (6)	K18 (6)	K18 (6)	K18 (6)	IL at Note 62	200’ MIN	400’ MIN	600’ MIN	900’ MIN	(58)	100’ MIN (26)	**21**
K24/30 750’MIN (25)(48)	K24/30 750’MIN (25)(48)	K24/30 750’MIN (25)(48)	K24/30 REAR K37 SIDE K30 FRT (25)(40)	PTR at Note 62	240’ MIN	480’ MIN	720’ MIN	1080’ MIN	(59)	100’ MIN	**22**

K3 80’ MIN	K3 80’ MIN	K3 80’ MIN	K3 80’ MIN	K3 80’ MIN	80’ MIN (69)	80’ MIN (69)	80’ MIN (69)	80’ MIN (69)	80’ MIN (69)	80’ MIN (26)(69)	**23**
K40/50 1250’MIN (47)	K40/50 1250’MIN (47)	K40/50 1250’MIN (47)	K40 REAR K62 SIDE K50 FRONT (40)	IB at Note 62	300’ MIN	800’ MIN	800’ MIN	800’ MIN	100’ MIN (29)(59)	100’ MIN (28)	**24**
K24/30 750’MIN (48)	K24/30 750’MIN (48)	K24/30 750’MIN (48)	K24/30 REAR K37 SIDE K30 FRT (40)	PTR at Note 62	240’ MIN	480’ MIN	720’ MIN	1080’ MIN	(59)	100’ MIN	**25**
K40/50 1250’MIN (47)	K40/50 1250’MIN (47)	K40/50 1250’MIN (47)	K40 REAR K62 SIDE K50 FRONT (40)	IB at Note 62	400’ MIN	800’ MIN	1200’ MIN	1800’ MIN	(59)	100’ MIN	**26**
K18 (6) (41)	K18 (6) (41)	K18 (6) (41)	K18 (6) (40)(41)	IL at Note 62	200’ MIN	400’ MIN	600’ MIN	900’ MIN	(58)	100’ MIN (26)	**27**
K40/50 1250’MIN (47)	K40/50 1250’MIN (47)	K40/50 1250’MIN (47)	K40 REAR K62 SIDE K50 FRONT (40)	IB at Note 62	400’ MIN	800’ MIN	1200’ MIN	1800’ MIN	(59)	100’ MIN	**28**
11	**12**	**13**	**14**	**15**	**16**	**17**	**18**	**19**	**20**	**21**	